S
333.11
M26eawb
1999
Robert Peccia &
Associates
Environmental
assessment for
Whitefish business
park land
exchange, Flathead

Environmental Assessment For Whitefish Business Park Land Exchange

Flathead County, Montana

Prepared For:
City of Whitefish, Montana
and
Montana Department of Transportation

Prepared By:
Robert Peccia & Associates, Helena, Montana

MONTANA STATE LIBRARY
3 0864 0014 4509 0

PLEASE RETURN

DECISION NOTICE
and
FINDING OF NO SIGNIFICANT IMPACT (FONSI)

WHITEFISH BUSINESS PARK LAND EXCHANGE EA
City of Whitefish, Montana
and
Montana Department of Transportation

STATE DOCUMENTS COLLECTION

1999

MONTANA STATE LIBRARY
1515 E. 6th AVE.
HELENA, MONTANA 59620

PROPOSAL

The City of Whitefish (City), the Montana Department of Transportation (MDT), and Pack & Company, Inc. are proposing a land exchange through which the City would purchase a 5-acre parcel from Pack & Company and then transfer ownership of the land to MDT. After assuming ownership of the Pack & Company property, MDT intends to construct a new field maintenance facility on the site. The City's conveyance of the Pack & Company parcel to MDT would serve as a down payment on the purchase of at least 18.84-acres of land adjacent to the City currently owned by MDT and used as a gravel pit.

Following the acquisition of the MDT parcel, the City would likely continue to extract some gravel from the site and MDT may continue to withdraw some existing sanding material from the pit. MDT would continue to maintain ownership of 3 acres or less of the property, including a storm water detention pond located on 1.16 acres of the site. However, the City would eventually fill, grade, and level the remainder of the gravel pit area to allow for the future development of a business/industrial park and/or other community facilities at this location.

The City believes there is a serious need for a business/industrial park within the community and the MDT parcel would fulfill that need. The parcel is centrally located on a major arterial within the community and the open gravel pit presents an eyesore. The parcel also offers a potential opportunity for the City to relocate its offices to the property. Because of its size, the site could easily be developed to house future City offices as well as a business/industrial park.

PUBLIC PROCESS AND COMMENT

A public hearing was held before the Flathead County Board of Adjustment on May 4, 1999 to obtain comments on the proposed construction of a MDT maintenance facility on the Pack & Company property. No public comments were heard at the hearing, even though surrounding property owners were notified and a notice of the hearing was published in the *Whitefish Pilot*. No written public comments were received following the hearing. The Flathead Regional Development Office presented a staff report that

supported the proposed business/industrial park concept on the MDT property and highlighted its potential economic development benefits.

The City also published an article describing the proposed land exchange and MDT's planned development of a maintenance facility in the May 27, 1999 edition of the *Whitefish Pilot*. The article described the proposed three-party land exchange and requested comments from the public through June 7, 1999. Following publication of the article, no written or oral comments were received on the proposed land exchange or MDT's planned development on the Pack & Company property.

A "rough draft" EA was prepared and circulated to City officials and staff at MDT for an internal review and comments. Comments obtained through this process were addressed and the content of the EA was revised as needed prior to being made available for public review. The Environmental Assessment for the proposed action was then made available for public comment from June 17, 1999 through June 24, 1999. Copies of the document were available for review at the Whitefish Library and at City offices. A copy of the notice of availability for the EA is attached.

No written or oral comments were received from the public on the proposed action. One comment was received from MDT's Preconstruction Engineer which indicated the EA needed to clarify the location and future plans for the MDT storm water detention basin located on the existing gravel pit site. In response to this comment, the text of the EA has been modified to better identify the location of the detention basin and indicate that MDT would retain ownership of less than 3 acres of the site, including the detention basin.

DECISION

Based on the analysis in the Environmental Assessment (EA) and applicable laws, regulations and policies, I have determined that this action will not have a significant effect on the natural or human environment. Therefore, an Environmental Impact Statement will not be prepared.

It is my decision to implement the proposed action. The EA made available for public review on June 17, 1999 will be accepted (with the following modifications and/or additions) as the Final EA.

Figure 2, MDT Property Site Location Map (by Land & Water Consulting) attached to the EA was modified to show the location of the existing storm water detention pond.

A new sentence was added to the text of the first full paragraph on page 5 that reads:

> "MDT would continue to maintain ownership of 3 acres or less of the property, including a storm water detention pond located on 1.16 acres of the site."

Implementation of this proposed action will begin in July, 1999.

The EA and this Decision Notice and FONSI may be viewed or obtained from the City of Whitefish, Office of the City Attorney, 204 Central Avenue, Whitefish, MT 59937 or the Montana Department of Transportation, Environmental Services, 2701 Prospect Avenue, P.O. Box 201001, Helena, MT 59620-0701.

Karl M Helvik

Karl M. Helvik, P.E.
Montana Department of Transportation
Environmental Services

June 30, 1999
Date

Please direct requests and questions to:

Daniel M. Norderud, AICP
Robert Peccia & Associates, Inc.
P.O. Box 5653
825 Custer Avenue
Helena, MT 59604
(406) 447-5000

...Nationwide Lender. 1-
ND. www.platinumcapi-

N PROPERTY MAINT.
mplete lawn care, spring
ub/pool maintenance, home
:s and more! 862-1892

---

ng & Clean-Up: Garages,
ntals, anything. 892–1738.

CA$H PAID FOR...•Struc-
nts, annuities, inheritances,
otes, contracts. Creative
soula. Fast, professional
1980. 1-800-999-4809.
finance.com.

ORTING GOODS

ONSTRUCTION CO. has
p for mechanic/welder. 5
:perience required. Wag-
gotiable. Resume to P.O.
owistown, MT 59457.
:ARTS FOR SALE. Call

ANTED

ooking for tax deductible
supplies, office chair, flat
wood working tools, print
nd tools, light table, gog-
ter and assorted other
5929 or stop by at 304

The checks or Bid Bonds of the three low Bidders accompanying such accepted Bids shall be held by the City until the Contract for doing said work, as hereinafter provided, has been entered into, whereupon said checks or Bid Bonds shall be returned to said Bidders. If the lowest responsible bidder fails, neglects, or refuses to enter into the contract to perform said work or improvements, as hereinafter provided, then the check or Bid Bond accompanying his or her bid, and the amount therein mentioned, shall be declared to be forfeited to the City. After a Contract is awarded, the successful bidder will be required to furnish a Performance and Payment Bond in the amount of one-hundred (100%) percent of the Contract.No Bidder may withdraw his bid for at lease ninety (90) days after the scheduled time for receipt of bids.

Bidders on the work will be required to comply with Montana Prevailing Wage Rates. It is incumbent upon each employer to pay, as a minimum, the rate of wages including fringe benefits for health and welfare and pension contributions, and travel allowance provisions, provided in the most current Prevailing Wage Rates. Bidders on the project will also be required to pay the State's 1% Contractor's withholding tax.

Attention is called to the "Instructions to Bidders" on file with the Plans and Specifications, which instructions are to be followed in all respects. All Proposals shall be submitted on the forms provided in the Specifications and shall not be removed from the bound copy.

Gary B. Marks, Whitefish City Manager, ATTEST: Kay Beller, City Clerk. #260, 06/17/99, 06/24/99, 07/01/99, 07/08/99

Doug Crockett Excavating and Trucking Inc. has completed the Whitefish sludge alum project as of June 9, 1999. Please notify our office at 5228 N. Foothills Drive, Polson, MT 59860 of any outstanding invoices or the City of Whitefish. #258, 06/17/99, 06/24/99, 07/01/99, 07/08/99, 07/15/99

Legals continued on page C-6

Claims should either be mailed to Jean M. Price, the Personal Representative, c/o Tracy Law Firm, return receipt requested, at 327 Spokane Avenue, Whitefish, Montana, 59937, or be filed with the Clerk of the above Court at 920 South Main, Kalispell, Montana 59901.

DATED this 27th day of May, 1999. Jean M. Price, Personal Representative. Personal Representative's Attorney, Leo W. Tracy, Tracy Law Firm, 327 Spokane Avenue, Whitefish, MT 59937. #250, 06/03/99, 06/10/99, 06/17/99

NOTICE OF AVAILABILITY
WHITEFISH BUSINESS PARK LAND EXCHANGE
ENVIRONMENTAL ASSESSMENT

The City of Whitefish (City) has prepared an Environmental Assessment (EA) that examines the environmental affects of a proposed land exchange between the City, the Montana Department of Transportation (MDT), and a private landowner. Under the proposed land exchange, the City would purchase a 5-acre parcel from the private landowner and then transfer ownership of the land to MDT to allow the construction of a new highway field maintenance facility on the property. The new MDT maintenance facility would be located directly north of the intersection of Montana Highway 40 and Whitefish Stage Road. The City's conveyance of private property to MDT would serve as a down payment on the purchase of at least 18.84 acres of MDT land located southwest of the community along Baker Avenue and presently used as a gravel pit. Following the acquisition of the MDT property, the City would likely continue to extract some gravel from the site but would eventually fill, grade, and level the gravel pit to allow for the development of a business/industrial park and/or other community facilities at this location.

The EA for the proposed land exchange discusses the details of the transaction, identifies potential environmental impacts, and other alternatives considered by the City and MDT. Copies of the EA are available for review at the City's Public Works Department and at the Whitefish Library. Comments on this proposed project will be accepted until 5.00 p.m. on June 24, 1999. Written comments should be submitted to Daniel M. Norderud, Robert Peccia & Associates, P.O. Box 5653, Helena, Montana 59604

Appeared in 6-17-99 issue of Pilot.

MEPA ENVIRONMENTAL ASSESSMENT
for
WHITEFISH BUSINESS PARK LAND EXCHANGE

in

FLATHEAD COUNTY, MONTANA

This document is prepared in conformance with MEPA requirements and contains the information required for an Environmental Assessment under the provisions of **ARM 18.2.237(2)** and **18.2.239**.

Submitted pursuant to **42 U.S.C. 4332(2)(c)**

by the

City of Whitefish

Approved:

City of Whitefish

Date: 6-21-99

Karl M Helvik

Montana Department of Transportation
Environmental Services

Date: June 21, 1999

The following persons may be contacted for additional information concerning this document:

John M. Phelps, City Attorney
City of Whitefish
204 Central Avenue
Whitefish, MT 59937
(406) 862-2528

Daniel M. Norderud, AICP
Robert Peccia & Associates, Inc.
P.O. Box 5653
Helena, MT 59604
(406) 447-5000

Whitefish Business Park Land Exchange
MEPA Environmental Assessment

PART I. PROPOSED ACTION DESCRIPTION

1. Type of Proposed State Action

The City of Whitefish (City), the Montana Department of Transportation (MDT), and Pack & Company, Inc. are proposing a land exchange through which the City would purchase a 5-acre parcel from Pack & Company and then transfer ownership of the land to MDT. After assuming ownership of the Pack & Company property, MDT intends to construct a new field maintenance facility on the site. The City's conveyance of the Pack & Company parcel to MDT would serve as a down payment on the purchase of at least 18.84-acres of land adjacent to the City currently owned by MDT and used as a gravel pit.

In separate future State Actions, the Montana Department of Environmental Quality (MDEQ) must: 1) process and approve an application to transfer MDT's permit to mine gravel at the pit to the City; and 2) evaluate and approve the City's subsequent application to amend the Mined Land Reclamation (gravel mining) Permit for the gravel pit. The amendment to the permit is necessary because the City's proposed reclamation method for the gravel pit would vary from that originally proposed by MDT for the site.

2. Agency Authority for the Proposed Action

MDT – Title 60, Chapter 4, Section 201, M.C.A.

3. Name of Project

Whitefish Business/Industrial Park Land Exchange

4. Name, Address and Phone Number of Project Sponsor

City of Whitefish
Office of the City Attorney
204 Central Avenue
Whitefish, MT 59937
(406) 862-2528

Montana Department of Transportation
2701 Prospect Avenue
P.O. Box 201001
Helena, MT
(406) 444-7228

5. If Applicable:

Estimated Construction/Commencement Date: Unknown - Business/Industrial Park
Fall, 1999 (MDT Maintenance Facility)

Estimated Completion Date of Land Exchange: July, 1999

Current Status of Project Design (% complete): 0% - Business/Industrial Park
50% - MDT Maintenance Facility

6. Location Affected by Proposed Action (county, range and township)

MDT Parcel (Existing gravel pit) – This 18.84-acre parcel is legally described as Tracts 5 and 5E of the NW¼ of the NE¼ of Section 1, Township-30-North, Range-22-West, M.P.M. The site is located at the southwest edge of Whitefish and lies west of Baker Avenue behind the existing Safeway grocery store.

Pack & Company, Inc. Parcel – This 5-acre parcel is located southeast of the City of Whitefish and is legally described as Tract 3BG of the SW¼ of the SE¼ of Section 8, Township-30-North, Range-21-West, M.P.M. The land is located directly north of Montana Highway 40 and Kalner Lane extends along the western boundary of the property. The intersection of Montana Highway 40 and Whitefish Stage Road is immediately southeast of the property.

7. Project Size: Estimate the number of acres that would be directly affected that are currently:

(a) Developed:
residential... 0 acres
industrial.... 3 acres (vacant)
gravel pit... 10 acres

(b) Open Space/Woodlands/
Recreation..... 0 acres

(c) Wetlands/Riparian
Areas..... 0 acres

(d) Floodplain... 0 acres

(e) Productive:
irrigated cropland..... 0 acres
dry cropland..... 0 acres
forestry..... 0 acres
rangeland..... 0 acres
Other..... 0 acres

8. Map/site plan: attach an original 8 1/2" x 11" or larger section of the most recent USGS 7.5' series topographic map showing the location and boundaries of the area that would be affected by the proposed action. A different map scale may be substituted if more appropriate or if required by agency rule. If available, a site plan should also be attached.

Figures 1 and 2 show the locations of the MDT gravel pit and the Pack & Company parcel. Other maps, exhibits, and photographs showing these affected properties are attached at the back of the Environmental Assessment.

9. Narrative Summary of the Proposed Action or Project including the Benefits and Purpose of the Proposed Action.

The City, the MDT, and Pack & Company, Inc. are proposing an exchange of property. Under the proposed land exchange, the City of Whitefish would purchase a 5-acre parcel from Pack & Company for $110,000 and then transfer ownership of the land to MDT. The City would never actually take title to the property since it would be conveyed directly to MDT. The City would receive title to at least 18.84 acres of land currently owned by MDT and used as a gravel pit. The Pack & Company parcel would serve as a down payment on the City's purchase of the MDT property and the City would provide MDT with a Promissory

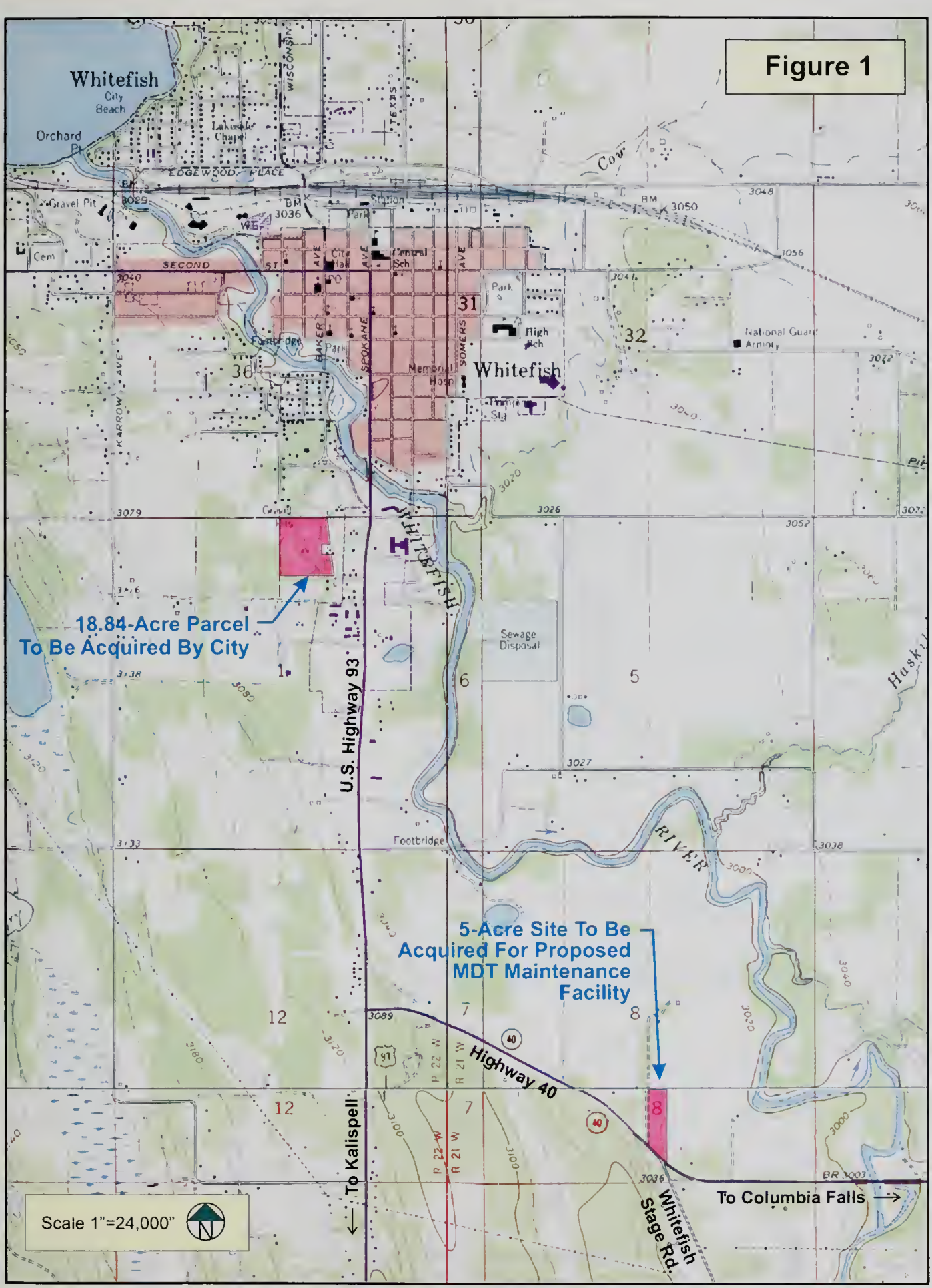
Figure 1
Whitefish
City Beach
Orchard Pt
EDGEWOOD PLACE
Gravel Pit
Cem
SECOND ST
Station
Park
Central Sch
City Hall
High Sch
Memorial Hosp
Whitefish
National Guard Armory
Footbridge
Park
KARROW AVE
BAKER AVE
SPOKANE AVE
SOMERS AVE
WISCONSIN
TEXAS
Cow
WHITEFISH
RIVER
Sewage Disposal
Footbridge
18.84-Acre Parcel
To Be Acquired By City
U.S. Highway 93
5-Acre Site To Be
Acquired For Proposed
MDT Maintenance
Facility
Highway 40
To Kalispell
To Columbia Falls
Whitefish Stage Rd.
Scale 1"=24,000"
N

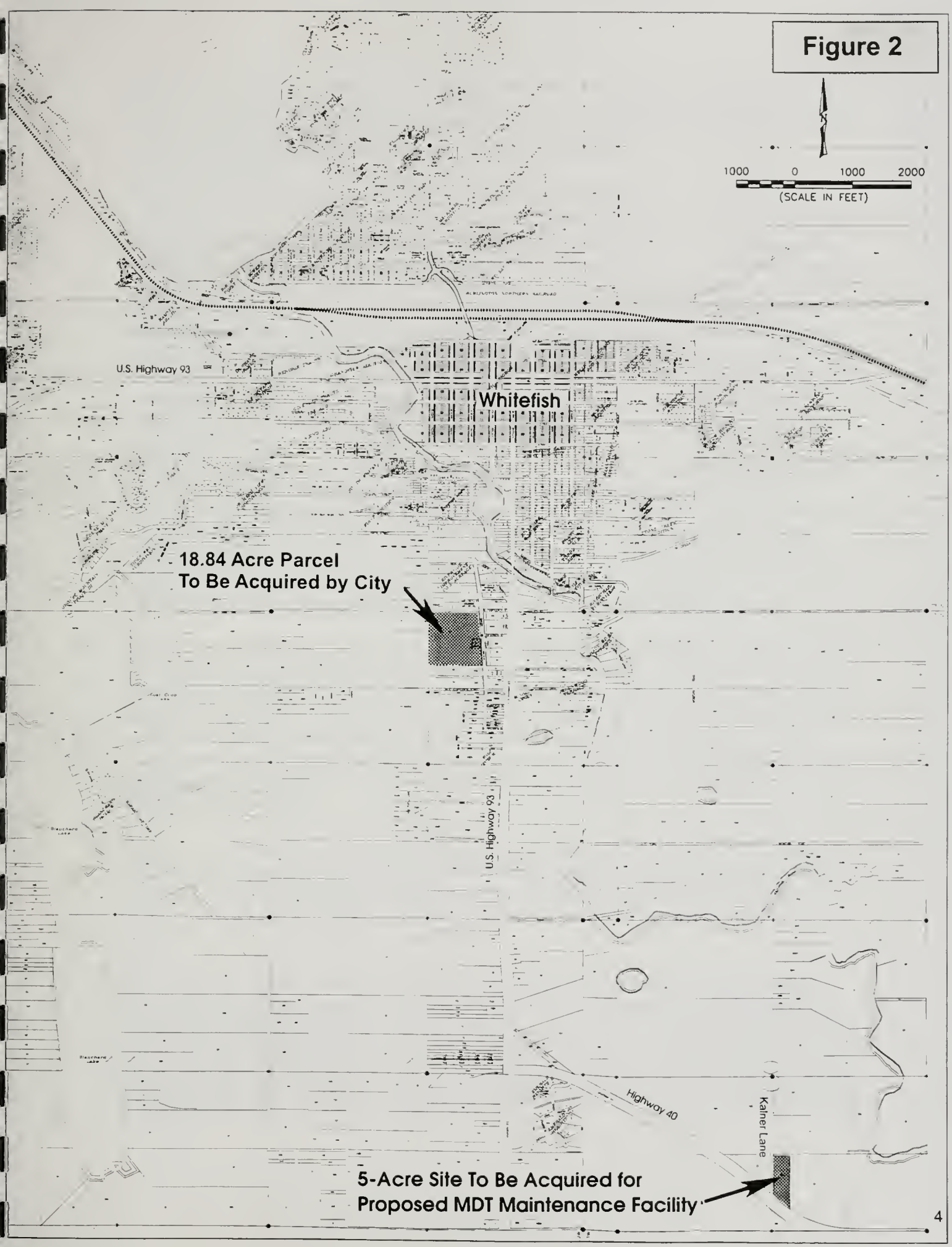
Figure 2
1000 0 1000 2000
(SCALE IN FEET)
U.S. Highway 93
Whitefish
18.84 Acre Parcel
To Be Acquired by City
U.S. Highway 93
Highway 40
Kalmer Lane
5-Acre Site To Be Acquired for
Proposed MDT Maintenance Facility

Note for the remainder of the parcel's $180,000 purchase price. MDT would give the City a $75,000 credit toward the purchase of the property for receiving title to the Pack & Company parcel. A copy of the proposed agreement between the City and MDT outlining the conditions of the proposed land exchange is attached to the EA.

Following the acquisition of the MDT parcel, the City of Whitefish would likely continue to extract some gravel from the site and MDT may continue to withdraw some existing sanding material from the pit. MDT would continue to maintain ownership of 3 acres or less of the property, including a storm water detention pond on 1.16 acres of the site. However, the City would eventually fill, grade, and level the gravel pit area to allow for the future development of a business/industrial park and/or other community facilities at this location. The City believes there is a serious need for a business/industrial park within the community and the MDT parcel would fulfill that need. The parcel is centrally located on a major arterial within the community and the open gravel pit presents an eyesore. The parcel also offers a potential opportunity for the City to relocate its offices to the property. Because of its size, the site could easily be developed to house future City offices as well as a business/industrial park.

No feasibility studies or conceptual plans have been made for the property at this time. The City has informally discussed developing the business/industrial park itself or possibly selling the site for development by another party. There are no immediate plans by the City to begin development at this site. The development of a business/industrial park at this location or the disposition of the property will be subject to future decisions by the City Council. The City is certain of two things -- the property can be put to a good future use and development of the site can eliminate an eyesore in the center of the community.

Once ownership of the former Pack & Company property is secured, MDT would construct a new highway field maintenance facility on the parcel. The maintenance facility would consist of a 60' x 90' building housing an office and stalls to accommodate storage of between six and eight large trucks, snowplows, and other similar equipment. Sand to be used for winter road maintenance in the area would also be stockpiled to the rear of the property. Only minor vehicle maintenance like oil changes and vehicle washing would be performed at the facility. Major repair work on maintenance vehicles and equipment would continue to occur at MDT's Kalispell facility.

The new maintenance facility would make use of a water well and septic system already installed on the property. Additionally, MDT would incorporate an existing office building and small storage building into the new maintenance facility. Preliminary plan sheets showing the proposed site layout for MDT's maintenance facility and a floor plan for the proposed maintenance building are attached.

A crew of four persons would likely work out of the MDT maintenance facility. General activity at the field maintenance site would involve drivers of trucks and other equipment arriving at the site to begin their workday. Employees would park their private vehicles at the facility and then drive MDT vehicles to maintenance locations on the State highway system in the area between Kalispell and Olney. The MDT employees would perform snowplowing, sanding of highways, sign repair, road repair, and similar activities on State-maintained roads in the area.

MDT hopes to award bids and begin construction of the maintenance facility by September, 1999.

The purpose of this EA is to examine the effects of undertaking the land exchange and the subsequent construction of MDT's proposed maintenance facility on the property to be acquired from Pack & Company.

10. Listing of any other Local, State or Federal agency that has overlapping or additional jurisdiction

(a) Permits:

Agency Name	Permit	Date Filed/#
MDEQ	Mined Land Reclamation Permit	(3/17/92)

(b) Funding:

Agency Name	Funding Amount
MDT	None (Land Exchange)

(c) Other Overlapping or Additional Jurisdictional Responsibilities:

Agency Name	Type of Responsibility
MDEQ	Mined Land Reclamation Permit
Flathead County Board of Adjustment	Hold Hearing to obtain comments on Proposed Construction of MDT Facility on Pack & Company property
Montana Dept. of Natural Resources and Conservation	Transfer of water rights for well on Pack & Company property

11. List of Agencies Consulted During Preparation of the EA:

Montana Department of Fish, Wildlife & Parks (Kalispell) – no comments received
Flathead Regional Development Office – no comments received
Montana Historical Society, State Historic Preservation Office – correspondence received
Montana Department of Environmental Quality (Kalispell) – telephone contacts
Montana Department of Transportation, Maintenance (Helena)

PART II. ENVIRONMENTAL REVIEW

1. Evaluation of the Impacts of the Proposed Action Including Secondary and Cumulative Impacts on the Physical and Human Environment:

IMPACTS

PHYSICAL ENVIRONMENT	UNKNOWN	NO IMPACTS	MINOR IMPACTS:	POTENTIALLY SIGNIFICANT IMPACTS:	CAN IMPACTS BE MITIGATED	COMMENT INDEX
1. LAND RESOURCES						
Will the proposed action result in:						
a. Soil instability or changes in geologic substructure?			X			1a.
b. Disruption, displacement, erosion, compaction, moisture loss, or over-covering of soil which would reduce productivity or fertility?		X				
c. Destruction, covering or modification of any unique geologic or physical features?		X				
d. Changes in siltation, deposition or erosion patterns that may modify the channel of a river or stream or the bed or shore of a lake?		X				
e. Exposure of people or property to earthquakes, landslides, ground failure, or other natural hazard?		X				
f. Other: N/A						

Include a narrative explanation describing the scope and level of impact. If the impact is unknown, explain why the unknown impact has not or can not be evaluated.

COMMENTS FROM ABOVE:

1a. Past mining activities at the MDT gravel pit have caused geologic materials to be disturbed to depths exceeding 40 or more feet in some portions of the site. The City may elect to remove additional gravel material from this site prior to reclaiming the site. The construction of MDT's proposed maintenance facility would have no impact on soils instability or geologic substructure.

Narrative Description of the Cumulative and Secondary Effects on Land Resources:

Reclamation of the gravel pit site to provide building sites would require future builders to perform some level of geotechnical investigations to determine if fill materials may be prone to settlement and to determine the most effective design for building foundations on the property.

IMPACTS

PHYSICAL ENVIRONMENT (Continued)	UNKNOWN*	NO IMPACTS	MINOR IMPACTS:*	POTENTIALLY SIGNIFICANT IMPACTS:*	CAN IMPACTS BE MITIGATED*	COMMENT INDEX
2. AIR						
Will the proposed action result in:						
a. Emission of air pollutants or deterioration of ambient air quality?			X			2a.
b. Creation of objectionable odors?		X				
c. Alteration of air movement, moisture, or temperature patterns or any change in climate, either locally or regionally?		X				
d. Adverse effects on vegetation, including crops, due to increased emissions of pollutants?		X				
e. Other: N/A						
3. WATER						
Will the proposed action result in:						
a. Discharge into surface water or any alteration of surface water quality including but not limited to temperature, dissolved oxygen or turbidity?		X				
b. Changes in drainage patterns or the rate and amount of surface runoff?			X			3b.

*Include a narrative explanation describing the scope and level of impact. If the impact is unknown, explain why the unknown impact has not or can not be evaluated.

COMMENTS FROM ABOVE (page 8):

2a. The City of Whitefish is designated as a nonattainment area for particulate matter 10 micrometers or smaller in size (PM-10) . This designation is based on violations of the Federal Clean Air Act's National Ambient air quality standards (NAAQS). The principal concerns are particulate matter generated by wood burning for home heating and from fugitive dust from road sanding materials. Neither the proposed land exchange or the construction of a new highway maintenance facility would increase PM-10 emissions within the Whitefish PM-10 nonattainment area. The land exchange and the construction of the proposed MDT maintenance facility are exempt from Air Quality conformity determinations because the proposed activities are non-federal actions.

This land exchange and the construction of a new highway maintenance facility are actions whose individual and cumulative effects would be minor and would not affect regional emissions.

Continued mining of the gravel pit site by the City, future reclamation of the pit area, and construction of MDT's proposed maintenance facility would require the use of heavy equipment like dozers, loaders, and trucking equipment. Such activities could cause brief periods of localized dusty conditions. Emissions would be produced by equipment and vehicles operating on each site.

3b Reclamation of the gravel pit site and the future development of a business/industrial park on the property would increase the amount of impermeable surface area and change runoff patterns. The design of the business/industrial park would have to include appropriate facilities to collect and transport storm water to the City's existing collection system or to an on-site detention area. MDT development on the Pack & Company site would not substantially change drainage patterns or the amount of surface runoff.

Narrative Description and Evaluation of the Cumulative and Secondary Effects on Air and Water Resources: No impacts would occur.

IMPACTS

PHYSICAL ENVIRONMENT (Continued)	UNKNOWN*	NO IMPACTS	MINOR IMPACTS:*	POTENTIALLY SIGNIFICANT IMPACTS:*	CAN IMPACTS BE MITIGATED*	COMMENT INDEX
3. WATER (continued)						
Will the proposed action result in:						
c. Alteration of the course or magnitude of flood water or other flows?		X				
d. Changes in the amount of surface water in any water body or creation of a new water body?		X				
e. Exposure of people or property to water related hazards such as flooding?		X				
f. Changes in the quality of groundwater?		X				
g. Changes in the quantity of groundwater?		X				
h. Increase in the risk of contamination of surface or groundwater?		X				
i. Violation of the Montana Non-Degradation Statute?		X				
j. Effects on any existing water right or reservation?		X				3j.
k. Effects on other water users as a result of any alteration in surface or groundwater quality?		X				
l. Effects on other users as a result of any alteration in surface or groundwater quantity?		X				
m Other: N/A						

*Include a narrative explanation describing the scope and level of impact. If the impact is unknown, explain why the unknown impact has not or can not be evaluated.

COMMENTS FROM ABOVE:

3j. The existing water rights for the well on the Pack & Company property would have to be transferred to MDT for use at the proposed maintenance facility.

Narrative Description and Evaluation of the Cumulative and Secondary Effects on Water Resources: No impacts would occur.

IMPACTS

PHYSICAL ENVIRONMENT (Continued)	UNKNOWN	NO IMPACTS	MINOR IMPACTS:	POTENTIALLY SIGNIFICANT IMPACTS:	CAN IMPACTS BE MITIGATED	COMMENT INDEX
4. VEGETATION						
Will the proposed action result in:						
a. Changes in the diversity, productivity or abundance of plant species (including trees, shrubs, grass, crops, and aquatic plants)?		X				
b. Alteration of a plant community?		X				
c. Adverse effects on any unique, rare, threatened, or endangered plant species?		X				4c.
d. Reduction in acreage or productivity of any agricultural land?		X				
e. Establishment or spread of noxious weeds?			X		Yes	4e.
f. Other: N/A						

Include a narrative describing the scope and level of impact. If the impact is unknown, explain why the unknown impact has not or can not be evaluated.

COMMENTS FROM ABOVE:

4c. Information obtained from the Montana Natural Heritage Program (May 10, 1999) indicates that nine sensitive plant species are known to exist in the general Whitefish area that encompasses both properties. The sensitive plants include watershield, slender sedge herbaceous vegetation, pygmy water lily, reed canary grass, Bebbs willow shrubland, water bulrush, common cattail, Sub-Artic bluet, and small yellow lady's-slipper. A review of the locations where these plants are known to occur indicates that most are associated with wetlands and occur along the shorelines of area lakes. Small yellow lady's-slipper (listed by the Forest Service as a sensitive species on the National Forest) is known to occur in moist lowland forest areas west of Whitefish. With the exception of some undisturbed portions of the MDT gravel pit property, similar habitats for these sensitive species do not occur on either the MDT or Pack & Company parcels and no adverse effects on sensitive plants are anticipated. A field search for small yellow lady's-slipper may be prudent prior to any future clearing and development on undisturbed portions of the MDT property.

4e. New land disturbances on the MDT and Pack & Company parcels offer the potential for the establishment or spread of noxious weeds. The re-establishment of permanent desirable vegetation communities on areas disturbed by the future development of a business/industrial park and the MDT maintenance facility would mitigate the potential for noxious weed invasion or spread. Future City and MDT actions on the properties would be subject to the provisions of the *County Noxious Weed Management Act* and other county noxious weed control provisions.

Narrative Description and Evaluation of the Cumulative and Secondary Effects on Vegetation Resources:
No impacts would occur.

IMPACTS

PHYSICAL ENVIRONMENT (Continued)	UNKNOWN*	NO IMPACTS	MINOR IMPACTS:	POTENTIALLY SIGNIFICANT IMPACTS:	CAN IMPACTS BE MITIGATED	COMMENT INDEX
5. FISH/WILDLIFE						
Will the proposed action result in:						
a. Deterioration of critical fish or wildlife habitat?		X				
b. Changes in the diversity or abundance of game animals or bird species?		X				
c. Changes in the diversity or abundance of nongame species?		X				
d. Introduction of new species into an area?		X				
e. Creation of a barrier to the migration or movement of animals?		X				
f. Adverse effects on any unique, rare, threatened, or endangered species?		X				5f.
g. Increase in conditions that stress wildlife populations or limit abundance (including harassment, legal or illegal harvest or other human activity)?		X				5g.
h. Other: N/A						

*Include a narrative explanation describing the scope and level of impact. If the impact is unknown, explain why the unknown impact has not or can not be evaluated.

COMMENTS FROM ABOVE (page 12):

5f. Information reviewed for this EA indicates that two federally-listed threatened or endangered species, the grizzly bear and bald eagle, occur in the general Whitefish area. Occupied grizzly bear habitat exists in mountainous terrain principally north and east of Whitefish and bald eagles are known to occur along the north and west of Whitefish Lake. The Montana Natural Heritage Program also indicated that common loons may occur in area lakes and the LeConte's sparrow may be found in wet meadow areas. Development of the properties would not cause adverse effects on unique, rare, threatened or endangered wildlife species due to a lack of habitats for such species.

5g. New land disturbances and construction activities may cause temporary displacement of or a loss of habitat for small non-game animals or birds that inhabit the properties.

Narrative Description and Evaluation of the Cumulative and Secondary Effects on Fish/Wildlife: No impacts would occur.

IMPACTS

HUMAN ENVIRONMENT	UNKNOWN*	NO IMPACTS	MINOR IMPACTS:*	POTENTIALLY SIGNIFICANT IMPACTS:*	CAN IMPACTS BE MITIGATED*	COMMENT INDEX
6. NOISE/ELECTRICAL EFFECTS						
Will the proposed action result in:						
a. Increases in existing noise levels?			X			6a.
b. Exposure of people to severe or nuisance noise levels?		X				
c. Creation of electrostatic or electromagnetic effects that could be detrimental to human health or property?		X				
d. Interference with radio or television reception and operation?		X				
e. Other: N/A						

*Include a narrative explanation describing the scope and level of impact. If the impact is unknown, explain why the unknown impact has not or can not be evaluated.

COMMENTS FROM ABOVE:

6a. Temporary increases in noise would be expected during reclamation activities at the gravel pit, during future development of a business/industrial park on the MDT property, and during the construction of MDT's proposed maintenance facility on the Pack & Company property. Such impacts would be localized to the area of construction and short-term in nature.

Narrative Description and Evaluation of the Cumulative and Secondary Effects on Noise/Electrical Effects: No impacts would occur.

IMPACTS

HUMAN ENVIRONMENT (Continued)	UNKNOWN*	NO IMPACTS	MINOR IMPACTS:*	POTENTIALLY SIGNIFICANT IMPACTS:*	CAN IMPACTS BE MITIGATED*	COMMENT INDEX
7 LAND USE Will the proposed action result in:						
a. Alteration of or interference with the productivity or profitability of the existing land use of an area?			X			**7a.**
b. Conflict with a designated natural area or area of unusual scientific or educational importance?		X				
c. Conflict with any existing land use whose presence would constrain or potentially prohibit the proposed action?		X				
d Adverse effects on or relocation of residences?		X				
e. Other: N/A						

*Include a narrative explanation describing the scope and level of impact. If the impact is unknown, explain why the unknown impact has not or can not be evaluated.

COMMENTS FROM ABOVE:

7a. The conversion of the gravel pit property into viable building sites for future business or industrial development would allow the property to be used for a higher (and more profitable) purpose than mining gravel. Changes in land use must go through the appropriate local planning and zoning review processes.

Narrative Description and Evaluation of the Cumulative and Secondary Effects on Land Use:

The development of a business/industrial park on the existing MDT gravel pit site would have long-term and positive secondary effects on land use patterns in the southwestern portion of Whitefish. The existing pit is surrounded by commercial uses and the proposed development of a business/industrial park would not be out of character with the area or conflict with other adjacent land uses. New sites for commercial and light industrial development would be created and the density of such development in the area would be increased. This is desirable since identifying sites in, or in close proximity to, the City, for development of a business/industrial park is one of the goals elaborated in the *Whitefish City-County Master Plan 2020*. The Master Plan was prepared and adopted by the City and Flathead County to guide future land use development in Whitefish and outlying areas of the community.

IMPACTS

HUMAN ENVIRONMENT (Continued)	UNKNOWN	NO IMPACTS	MINOR IMPACTS:	POTENTIALLY SIGNIFICANT IMPACTS:	CAN IMPACTS BE MITIGATED	COMMENT INDEX
8. RISK/HEALTH HAZARDS Will the proposed action result in:						
a. Risk of an explosion or release of hazardous substances (including, but not limited to oil, pesticides, chemicals, or radiation) in the event of an accident or other forms of disruption?		X				
b. Affect an existing emergency response or emergency evacuation plan or create a need for a new plan?		X				
c. Creation of any human health hazard or potential hazard?			X		**Yes**	**8c.**
d. Other: N/A						

Include a narrative explanation describing the scope and level of impact. If the impact is unknown, explain why the unknown impact has not or can not be evaluated.

COMMENTS FROM ABOVE:

8c. Land & Water Consulting, Inc. of Kalispell prepared Phase I Environmental Investigation Report for hazardous materials for both the MDT and Pack & Company properties during May, 1999. The firm's report indicated that two small areas of petroleum contamination were identified on the MDT property at an existing shed where a loader is frequently stored. Soil samples collected near the shed displayed significant levels of both diesel fuel and gasoline. Oil stained soil was also identified in the loader shed. A 55-gallon drum of sodium hydroxide, a highly corrosive chemical, and an above-ground diesel fuel storage tank were identified on the Pack & Company property. Pack & Company operated a portable concrete batch plant at the site during the mid-1980s.

The soil contamination at the MDT site is believed to be of a limited vertical extent and can be mitigated most easily by the excavation and removal of the contaminated soil. Sampling of the soils removed can then be done to document the site is "clean" from contaminants. Sampling of the substance in the 55-gallon drum on the Pack & Company property should be done to confirm its contents and identify the most appropriate method for handling and disposing of the hazardous material. The above-ground diesel fuel storage should be cleaned and properly abandoned in compliance with MDEQ regulations.

Narrative Description and Evaluation of the Cumulative and Secondary Effects on Risk/Health Hazards: No impacts would occur.

IMPACTS

HUMAN ENVIRONMENT (Continued)	UNKNOWN	NO IMPACTS	MINOR IMPACTS	POTENTIALLY SIGNIFICANT IMPACTS	CAN IMPACTS BE MITIGATED	COMMENT INDEX
9. COMMUNITY IMPACTS						
Will the proposed action result in:						
a. Alteration of the location, distribution, density, or growth rate of the human population of an area?		X				
b. Alteration of the social structure of a community?		X				
c. Alteration of the level or distribution of employment or community or personal income?		X				
d. Changes in industrial or commercial activity?			X			9d.
e. Increased traffic hazards or effects on existing transportation facilities or patterns of movement of people and goods?			X			9e.
f. Other: N/A						

Include a narrative explanation describing the scope and level of impact. If the impact is unknown, explain why the unknown impact has not or can not be evaluated.

COMMENTS FROM ABOVE:

9d. The development of a business/industrial park on the MDT property would increase opportunities for new commercial and industrial development to locate in the Whitefish area.

9e. Development of a business/industrial park on the MDT property would generate additional traffic on the local street network for trips to/from businesses at the park and locations in Whitefish and surrounding areas of the community. The level of expected traffic increases and required changes to the existing road system cannot be estimated without a development plan for the business/industrial park site.

MDT's proposed maintenance facility on the Pack & Company property would change travel patterns for MDT employees formerly assigned to other maintenance facilities and would increase traffic by large maintenance vehicles and other equipment at the intersection of Highway 40/Whitefish Stage Road and Kalner Lane. The expected increase in traffic due to the MDT facility on the Pack & Company property would be expected to be less than 25 vehicle trips per day.

Narrative Description and Evaluation of the Cumulative and Secondary Effects on Community Impacts:
Depending upon the extent and rate to which development occurs at the proposed business/industrial park, additional employment opportunities would be provided and increases in personal income and expenditures within the community would be realized.

IMPACTS

HUMAN ENVIRONMENT (Continued)

	UNKNOWN	NO IMPACTS	MINOR IMPACTS:	POTENTIALLY SIGNIFICANT IMPACTS:	CAN IMPACTS BE MITIGATED	COMMENT INDEX
10. PUBLIC SERVICES/ TAXES/UTILITIES						
Will the proposed action result in:						
a. Have an effect upon or result in a need for new or altered governmental services in any of the following areas: fire or police protection, schools, parks/recreation facilities, roads or other public maintenance, water supply, sewer or septic systems, solid waste disposal, health or other governmental services?			X			10a.
b. Have an effect upon the local or state tax base and revenues?			X			10b.
c. Result in a need for new facilities or substantial alterations to any of the following utilities: electric power, natural gas, other fuel supply or distribution systems, or communications?			X			10c.
d. Result in increased use of any energy source?			X			10d.
e. Other: N/A						

Include a narrative explanation describing the scope and level of impact. If the impact is unknown, explain why the unknown impact has not or can not be evaluated.

COMMENTS FROM ABOVE:

10a. The provision of new and/or altered governmental services would be necessary with the development of a business/industrial park in southwest Whitefish. During the planning and design of the park, consideration would have to be given to identifying logical connections to existing water, sewer, and storm drainage infrastructure in the City. Similar infrastructure items would need to be constructed on the business/industrial park site to accommodate planned commercial and industrial development. Community fire and police protection, solid waste collection, and the local road system would also have to be extended into the business/industrial park area. The extension of City infrastructure and services into the business/industrial park is an action the City is willing to undertake given their interest in completing the land exchange.

The proposed MDT maintenance facility would not substantially increase the need for new or altered community services or infrastructure.

COMMENTS FROM PREVIOUS PAGE (10. PUBLIC SERVICES/TAXES/UTILITIES):

10b. The transfer of ownership of the Pack & Company property to MDT would remove approximately 5-acres of private land from the County tax roles. Because the property would be owned by the State of Montana, County property taxes would no longer be collected on the parcel causing a minor decrease in tax revenue for Flathead County.

10c. Similar to comment 10a, above, essential utilities and communications facilities would have to be upgraded to adequately serve the proposed business/industrial park area. The proposed MDT maintenance facility would not require new or substantial alterations to utilities or communications facilities.

10d. Reclamation of the gravel pit and the eventual construction of the business/industrial park would consume energy through the operation of construction equipment. Likewise, minor amounts of energy would be consumed through the construction of the proposed maintenance facility.

Narrative Description and Evaluation of the Cumulative and Secondary Effects on Public Services/Taxes/Utilities:
As a result of the proposed business/industrial park development, tax revenues would increase as commercial or industrial enterprises locate in the park. This would be a positive benefit to both local and state government.

Total energy consumption in the Whitefish area would increase slightly in the future as commercial and/or industrial businesses locate in the business park and conduct their normal operations.

IMPACTS

HUMAN ENVIRONMENT (Continued)	UNKNOWN*	NO IMPACTS	MINOR IMPACTS*	POTENTIALLY SIGNIFICANT IMPACTS*	CAN IMPACTS BE MITIGATED*	COMMENT INDEX
11. AESTHETICS/ RECREATION Will the proposed action result in:						
a. Alteration of any scenic vista or creation of an aesthetically offensive site or effect that is open to public view?		X				
b Alteration of the aesthetic character of a community or neighborhood?			X			**11b.**
c. Alteration of the quality or quantity of recreational opportunities and settings?		X				
d. Other: N/A						

*Include a narrative explanation describing the scope and level of impact. If the impact is unknown, explain why the unknown impact has not or can not be evaluated.

COMMENTS FROM ABOVE:

11b. The reclamation and eventual development of a business/industrial park on the MDT gravel pit site would eliminate an eyesore in the center of the community. The overall aesthetic character of southwest Whitefish would be substantially improved if the business/industrial park were designed to integrate commercial and light industrial uses in a campus-like development.

Narrative Description and Evaluation of the Cumulative and Secondary Effects on Aesthetics/Recreation: No impacts would occur.

IMPACTS

HUMAN ENVIRONMENT (Continued)	UNKNOWN*	NO IMPACTS	MINOR IMPACTS:*	POTENTIALLY SIGNIFICANT IMPACTS:*	CAN IMPACTS BE MITIGATED*	COMMENT INDEX
12. CULTURAL/ HISTORICAL RESOURCES Will the proposed action result in: a. Destruction or alteration of any site, structure or object of prehistoric, historic, or paleontological importance?	X					12a.
b Physical change that would affect unique cultural values?		X				
c. Effects on existing religious or sacred uses of a site or area?		X				
d Other: N/A						

*Include a narrative explanation describing the scope and level of impact. If the impact is unknown, explain why the unknown impact has not or can not be evaluated.

COMMENTS FROM ABOVE:

12a. The State Historic Preservation Office (SHPO) conducted a cultural resource file search for the general area that encompasses the MDT and Pack & Company properties. In a May 19, 1999 letter, SHPO stated that there are no previously recorded cultural resource or archaeological sites within the immediate area of these properties. The agency also indicated that due to a lack of previous surveys, there is a possibility that unknown or unrecorded cultural resources could be encountered. SHPO recommended that both the MDT and the Pack & Company properties be inventoried for cultural resources prior to ground disturbing activities.

Reclamation of the gravel pit and construction of the MDT maintenance facility would generally occur on portions of the respective properties which have already been disturbed for mining and for the construction and use of a concrete batch plant. Given these previous ground disturbances, the likelihood of encountering cultural materials on already disturbed areas of these properties is considered very low. Cultural resource inventories should be completed prior to undertaking development activities on previously undisturbed portions of the MDT and Pack & Company properties.

Narrative Description and Evaluation of the Cumulative and Secondary Effects on Cultural/Historical Resources: No impacts would occur.

IMPACTS

SIGNIFICANCE CRITERIA	UNKNOWN*	NO IMPACTS	MINOR IMPACTS:*	POTENTIALLY SIGNIFICANT IMPACTS:*	CAN IMPACTS BE MITIGATED*	COMMENT INDEX
13. SUMMARY EVALUATION OF SIGNIFICANCE						
Will the proposed action, considered as a whole:						
a. Have impacts that are individually limited, but cumulatively considerable? (A project or program may result in impacts on two or more separate resources which create a significant effect when considered together or in total.)		X				
b. Involve potential risks or adverse effects which are uncertain but extremely hazardous if they were to occur?		X				
c. Potentially conflict with the substantive requirements of any local, state, or federal law, regulation, standard or formal plan?		X				
d. Establish a precedent or likelihood that future actions with significant environmental impacts will be proposed?		X				
e. Generate substantial debate or controversy about the nature of the impacts that would be created?		X				
f. Other: N/A						

*Include a narrative explanation describing the scope and level of impact. If the impact is unknown, explain why the unknown impact has not or can not be evaluated.

PART II. ENVIRONMENTAL REVIEW (Continued)

2. Description and analysis of reasonable alternatives (including the no action alternative) to the proposed action whenever alternatives are reasonably available and prudent to consider and a discussion of how the alternatives would be implemented:

Alternative No. 1: No Action.

Under this alternative, no land exchange would take place. MDT and Pack & Company, Inc. would retain existing ownership of their respective properties and the City would not expend or become obligated to spend any funds to acquire land for a future business/industrial park. The City would remain deficient in properties suitable for the development of new commercial/industrial sites. The gravel pit would continue to be out of character with adjacent land uses and would remain a visual intrusion on the landscape in the southwest portion of Whitefish.

MDT would continue to mine gravel from the pit southwest of Whitefish and the Pack & Company property would remain idle. MDT would continue to travel to the Whitefish area from Kalispell to complete road maintenance activities on state roads in the north Flathead Valley. The current situation does not allow MDT to most efficiently respond to maintenance needs in the Whitefish area.

Alternative No. 2: Preferred Alternative, Project as Proposed.

This alternative involves the purchase of a 5-acre parcel from Pack & Company, Inc. by the City and the subsequent transfer of ownership of the property to the MDT. In return, the City would receive at least 18.84 acres of land owned by MDT and currently used as a gravel pit. The City would receive a credit toward the purchase of the gravel pit property from MDT for receiving title to the Pack & Company parcel. The City would provide MDT with a Promissory Note for the remainder of the MDT parcel's purchase price.

Following the acquisition of the MDT parcel, the City of Whitefish would likely extract some gravel from the pit for its own uses but eventually fill, grade, and level the area to allow for the future development of the property. There are no immediate plans by the City to develop this site but actions to initiate development of a business/industrial park on the property would be expected to occur within the next five years. Options for the property informally discussed by the City include developing a business/industrial park or possibly selling all or portions of the site for development by another party. The future disposition of the property would be subject to decisions by the City Council.

Once ownership of the former Pack & Company property is secured, MDT would construct a new highway field maintenance facility on the parcel. The maintenance facility would consist of a 60' x 90' building housing an office and stalls to accommodate storage of between six and eight large trucks, snowplows, and other similar equipment. Sand to be used for winter road maintenance in the area would also be stockpiled to the rear of the property.

The land exchange would take place as soon as the appropriate paperwork is completed. Construction of MDT's proposed maintenance facility could begin as early as September, 1999.

3. Evaluation and listing of mitigation, stipulation, or other control measures enforceable by the agency or another government agency:

The MDEQ is responsible for permitting the mining of gravel on the MDT property. The agency must process and approve an application to transfer MDT's Mined Land Reclamation Permit to the City. Prior to beginning reclamation activities on the site, the City must apply for an amendment to the Mined Land Reclamation Permit from MDEQ because the City's proposed reclamation method for the gravel pit would vary from that originally proposed by MDT for the site. As part of the application for the permit amendment, the City must provide detailed information to MDEQ describing their proposed plan for reclaiming the gravel pit site.

A business park zoning district encompassing the MDT property would likely be created as one of the initial steps to develop a business/industrial park on the site. The zoning district would specify permitted land uses and provide guidelines for the desired development of light industrial and commercial uses within the district.

The City and MDT have complied with state law and thereby established an exemption from local zoning regulations in order to build the proposed maintenance facility on the Pack & Company parcel. The property is located in the Southeast Rural Whitefish Zoning District on a Suburban Agricultural zoning district. The proposed use of the land for a MDT maintenance facility is not listed as a permitted or conditionally permitted use in this district. Section 76-2-402, M.C.A., requires that a public hearing be held by the local zoning authority (Board of Adjustment) when a use is proposed by a local government agency which is not specifically allowed by the zoning regulations. The Board of Adjustment has no power to deny the use proposed by local government but serves to provide a public forum for comment on the proposed use. A public hearing was held for this purpose and no comments on the proposed change in use of the Pack & Company property were received. The Board of Adjustment took no action to approve or deny the zoning exemption.

PART III. NARRATIVE EVALUATION AND COMMENT

The proposed land exchange would be mutually beneficial to all parties involved. The City believes there is a serious lack of sites for commercial and light industrial development within the Whitefish area. This deficiency is elaborated in the City's Master Plan that states "industrially developed land available for lease or purchase within the Planning Jurisdiction is almost non-existent." The Master Plan lists the identification and development of industrial park sites in and around the City as one of its goals. The City believes that acquiring and developing the MDT parcel would help address this community need. The parcel is centrally located on a major arterial (Baker Avenue) and the open gravel pit is unsightly. Because of its size, a business/industrial park at the site could easily be developed to house other uses (like future City offices) as well as commercial and light industrial uses. By employing an appropriate design and landscaping, the business/industrial park is expected to be a highly attractive part of the community and compatible with adjoining land uses in southwest Whitefish.

The City of Whitefish would use funds from its Urban Renewal (Tax Increment) District to make the initial payment on the Pack & Company property that it would acquire on behalf of MDT. The MDT would obtain ownership of a property that would allow the agency to station personnel, equipment, and supplies at a location conducive to providing road maintenance in the Whitefish area. The establishment of a maintenance facility on the Pack & Company property would eliminate the need for MDT to shuttle equipment to and from its Kalispell facilities. MDT's ability to respond to maintenance needs, particularly during the winter, would be greatly enhanced through the construction of a new maintenance facility on Highway 40 near Whitefish.

Pack & Company would receive "fair market value" compensation from the City for the sale of their property.

PART IV. EA CONCLUSION SECTION

1. Based on the significance criteria evaluated in this EA, is an EIS required? YES / NO If an EIS is not required, explain why the EA is the appropriate level of analysis for this proposed action:

This Environmental Assessment examines the effects of the proposed exchange of property between the City of Whitefish, the Montana Department of Transportation, and Pack & Company, Inc. and the construction of a new MDT maintenance facility on the land acquired from Pack & Company. Based on the evaluation completed for these proposed actions, it does not appear that the preparation of an Environmental Impact Statement (EIS) is warranted. This EA will be available for public review and comment and if any significant impacts are identified or raised during the review period, they will be evaluated to determine if an EIS is necessary.

2. Describe the level of public involvement for this project if any and, given the complexity and the seriousness of the environmental issues associated with the proposed action, is the level of public involvement appropriate under the circumstances?

A public hearing was held before the Flathead County Board of Adjustment on May 4, 1999 to obtain comments on the proposed construction of a MDT maintenance facility on the Pack & Company property. No public comments were heard at the hearing, even though surrounding property owners were notified and a notice of the hearing was published in the paper. No written public comments were received following the hearing. The Flathead Regional Development Office presented a staff report that supported the proposed business/industrial park concept on the MDT property and highlighted its potential economic development benefits.

The City also published an article describing the proposed land exchange and MDT's planned development of a maintenance facility in the May 27, 1999 edition of the Whitefish Pilot. The article described the proposed three-party land exchange and requested comments from the public through June 7, 1999. A copy of the newspaper article is attached to the EA. Following publication of the article, no written or oral comments were received on the proposed land exchange or MDT's planned development on the Pack & Company property.

To date, there have been no other written or oral comments received on these proposed actions. It is believed that these public involvement opportunities were sufficient to solicit comments.

There is no known public controversy surrounding the proposed development of a business/industrial park on the MDT property or the proposed construction of a new MDT maintenance facility on the Pack & Company property.

3. Duration of comment period if any:

This Environmental Assessment will be available for a 7-day comment period beginning June 17, 1999 and ending on June 24, 1999. A copy of the notice of availability for this EA is attached. All written comments received will be considered, and a Decision Notice will be issued.

4. Name, title, address and phone number of the Person Responsible for Preparing the EA:

Daniel M. Norderud, AICP
Environmental Studies Division Manager
Robert Peccia & Associates, Inc.
825 Custer Avenue, P.O. Box 5653
Helena, MT 59604
Phone (406) 447-5000

Phase I Environmental Investigation Report for hazardous materials prepared in support of EA by:

Roger A. Noble, P.G., Project Manager
Land & Water Consulting, Inc.
575 Sunset Boulevard #207
P.O. Box 8027
Kalispell, MT 59901
Phone (406) 257-7200

Maps and Photographs of Affected Properties

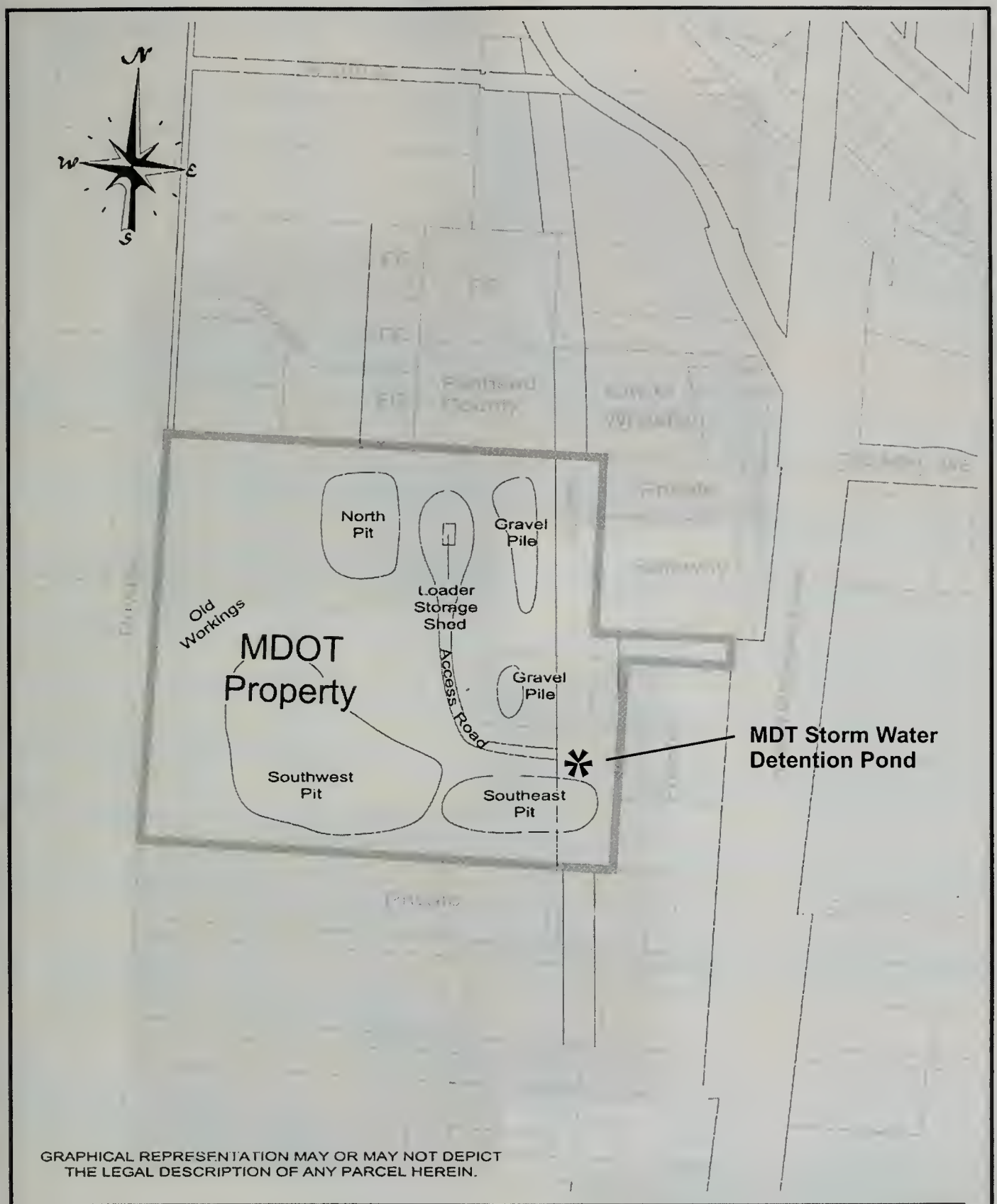

GRAPHICAL REPRESENTATION MAY OR MAY NOT DEPICT THE LEGAL DESCRIPTION OF ANY PARCEL HEREIN.

Figure 2,
MDOT Property
Site Location Map

K99-050 exb.dwg

300' 150' 0 150' 300'

Scale: 1" = 300'

Project Manager: R. Noble Draftsman: J.S.

5-5-99

LAND & WATER CONSULTING, INC.
(406) 257-7200 575 Sunset Blvd #207
(406) 257-7205 FAX Kalispell, MT 59901

Photographs of MDOT Property

View looking northerly across property. Road at right of photo is Baker Avenue.

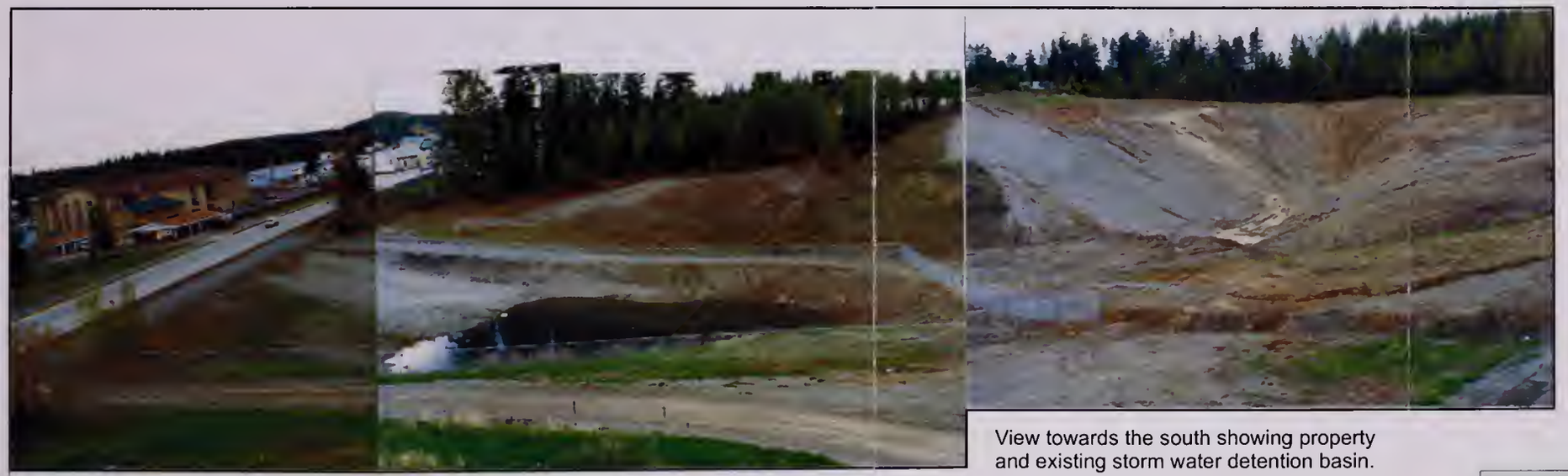

View towards the south showing property and existing storm water detention basin.

Photographs of MDOT Property

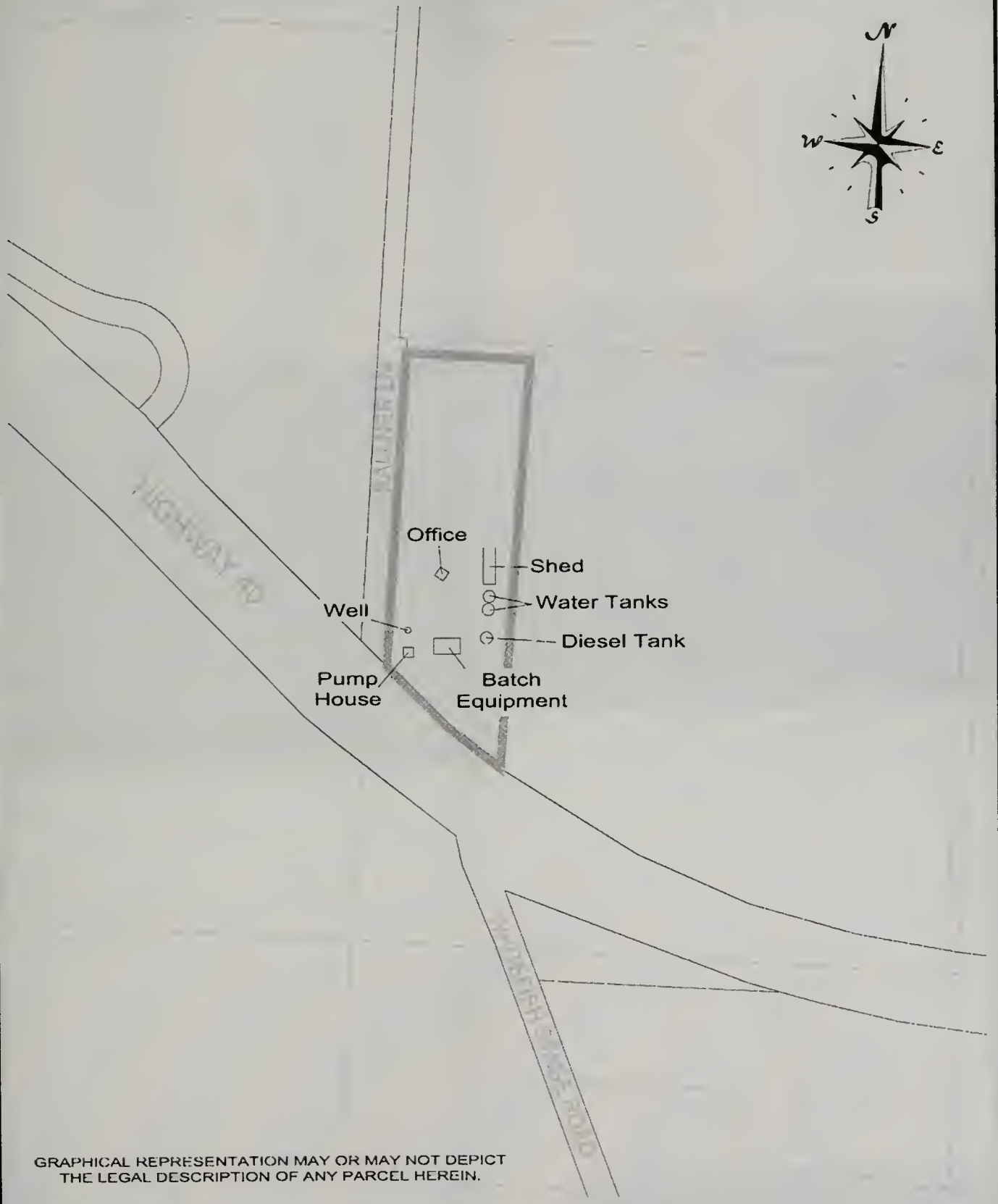

GRAPHICAL REPRESENTATION MAY OR MAY NOT DEPICT THE LEGAL DESCRIPTION OF ANY PARCEL HEREIN.

Figure 5, Pack & Co. Property
Site Location Map

K99-050 exa.dwg

300' 150' 0 150' 300'

Scale: 1" = 300'

Project Manager: R. Noble Draftsman: J.S.

5-5-99

LAND & WATER CONSULTING, INC.
(406) 257-7200 575 Sunset Blvd #207
(406) 257-7205 FAX Kalispell, MT 59901

GRAPHICAL REPRESENTATION MAY OR MAY NOT DEPICT THE LEGAL DESCRIPTION OF ANY PARCEL HEREIN.

Figure 5, Pack & Co. Property
Site Location Map

K99-050 exa.dwg

300' 150' 0 150' 300'

Scale: 1" = 300'

Project Manager: R. Noble Draftsman: J.S.

5-5-99

LAND & WATER CONSULTING, INC.
(406) 257-7200 575 Sunset Blvd. #207
(406) 257-7205 FAX Kalispell, MT 59901

Photographs of Pack & Company Property

Photopg1.cdr8

View looking northeasterly across property from near the intersection of Kalner Lane and Montana Highway 40.

Photographs of Pack & Company Property

Preliminary Agreement for Land Exchange

Preliminary Agreement for Land Exchange

AGREEMENT

This agreement is entered into this ____ day of _____, 1999, by and between the State of Montana, Department of Transportation (MDT), and the City of Whitefish, Montana, a municipal corporation (City) for the purpose of exchanging parcels of real property located in Flathead County, Montana,

WITNESSETH

WHEREAS, MDT presently owns a parcel of land approximately 15.27 acres in size within the City, more particularly described in Exhibit A, which MDT uses as a maintenance facility site and gravel pit source for highway purposes; and

WHEREAS, MDT is desirous of relocating its maintenance facility to meet current and future highway maintenance purposes and further wishes to maintain access to and the use of the gravel pit resources, in the North Flathead Valley area, for a set future period; and

WHEREAS, the City is desirous of obtaining ownership of and uses of the MDT parcel for future development and land use planning; and

WHEREAS, the City proposes to exchange with MDT a parcel of real property to be acquired by the City and suited to the needs of MDT for a maintenance facility; and

WHEREAS, the parties recognize and agree that state law allows MDT to exchange property for highway purposes, NOW THEREFORE, the parties agree as follows:

For and in consideration of the mutual promises, covenants, and other valuable consideration, the City and MDT agree that MDT will exchange, and the City will purchase the 15.27-acre parcel described in Exhibit A on the following terms:

A. Purchase Price

1. The parties agree that the fair market value of the MDT parcel is $180,000, which the City agrees to pay on the following terms:

a. The City will exercise its best, good faith efforts to acquire a good and clear title to a 5-acre tract of real property (described in Exhibit B), commonly known as the Pack parcel, which the parties agree has an appraised value of $75,000, which MDT agrees to accept as a partial payment for Exhibit A. If the City is unable to acquire a good and clear title to the Pack parcel, it shall be entitled to withdraw from this Agreement.

b. In addition to the land to be exchanged by the City, the City agrees to pay the balance of the $180,000 fair market value or $105,000 by executing a promissory note to MDT

in the principal amount of $105,000 with interest calculated at the lowest rate permissible by law to be set forth in the note. The note shall be payable in full within 20 years of the date of execution by the City. The parties understand and agree that the City will make installment payments on the note at such times as the City is able to develop and/or sell parcels of the 15.27-acre tract of land. Payments, when made, shall be applied first to interest, then principal. MDT agrees to provide releases in 1-acre minimums on a pro rata basis determined as follows.

Payments and Releases: Payments will be made as the City sells parcels. The payments will be first applied to interest and then to principal. Releases will be made in one acre minimums on a pro rata basis. The pro rata release price for any given parcel will be calculated as follows: Balance on the note divided by the remaining useable/saleable acreage. All of the state property will ultimately be sold and, therefore, released. The final master plan, developed by the city, for the Baker Avenue Business Park will calculate gross acreage to be included in any given sale so that all the property is released when sales are complete.

c. The promissory note described herein (attached as Exhibit C) shall be secured by a trust indenture on the state parcels which shall include the provision allowing the City to obtain releases on the one-acre tracts as described in b.

2. In addition to the land exchange described here and as additional consideration, the City agrees to exercise its best, good faith efforts to obtain an option to provide to MDT up to 100,000 cubic yards of gravel from a North Flathead Valley location which may be mined up to 10 years from the date of execution of this agreement. The City will assign the option to MDT and MDT will pay to the owner $.50 per cubic yard for any material removed pursuant to the option. After 10 years, MDT forfeits any right to any future use of the material not used of the 100,000 cubic yards. If the City is unable to obtain an option to acquire such gravel, it shall be entitled to withdraw from this Agreement.

B. <u>Other Terms and Conditions.</u>

1. Environmental. The parties recognize and agree that the MDT parcel and the Pack parcel may have environmental and/or hazardous material issues. MDT agrees that it will indemnify, defend, and hold harmless the City from any environmental and/or hazardous material claims, loss, damage or cause of action arising from or due to MDT's or any previous owner's past or present use or occupancy of the 15.27-acre tract (Exhibit A) being conveyed to the City. The City in turn agrees to indemnify, defend, and hold harmless the State from any environmental and/or hazardous material clams, loss, damage or cause of action arising from or due to the use or occupancy of the five-acre Pack parcel by the City or any previous owner.

2. The parties recognize and agree that the 15.27-acre state parcel includes a gravel pit mining operation. Except for any environmental and/or hazardous material responsibility as

provided in B.1. of this agreement, the City agrees to assume responsibility for reclamation of the pit to any state and/or federal or local government statutes or regulations regarding site reclamation.

3. The City agrees that as a condition precedent to this agreement, that the City will resolve any state or local zoning requirements relative to the Pack parcel to ensure that MDT will be able to utilize the Pack parcel as a maintenance facility

4 The City acknowledges that the land exchange described herein is at the request of the City and as the purchaser agrees to assume responsibility for the preparation and payment for any environmental documents required by law.

5. Title Insurance, Deeds, Costs.

a. MDT Parcel MDT shall convey the MDT parcel to the City by Bargain and Sale Deed. MDT shall, at MDT's expense, furnish the City with title insurance evidenced by a standard form American Land Title Association title insurance commitment in an amount equal to the purchase price, committing to insure merchantable title to the MDT parcel in the City's name, free and clear of all liens and encumbrances except those accepted by the City The City shall have 20 days after receipt of a title insurance commitment to object, in writing, to any exceptions described therein. If no objection is made within the time allowed, the City shall be deemed to have accepted the title commitment. If the City objects to any exception, as stated above, MDT shall have 60 days within which to remove the exception or otherwise satisfy the City. If MDT is unable to remove the exception or otherwise satisfy the City, after exercising its best, good-faith efforts, the City may withdraw from this Agreement, in which case it shall be of no further force and effect. MDT shall procure title insurance from an insurer acceptable to both parties, and the parties shall select a closing agent that is acceptable to both parties. Any and all costs of the closing agent shall be shared equally between the parties.

b. Pack Parcel. The City shall convey the Pack parcel to MDT by Bargain and Sale Deed. The City shall, at the City's expense (or at Pack and Company's expense), furnish MDT with title insurance evidenced by a standard form American Land Title Association title insurance commitment in the amount of $75,000.00, committing to insure merchantable title to the Pack parcel in MDT's name, free and clear of all liens and encumbrances except those accepted by MDT. MDT shall have 20 days after receipt of a title insurance commitment to object, in writing, to any exceptions described therein. If no objection is made within the time allowed, MDT shall be deemed to have accepted the title commitment. If MDT objects to any exception, as stated above, the City shall have 60 days within which to remove the exception (or arrange for Pack and Company to remove it) or otherwise satisfy MDT. If the City is unable to remove the exception (or arrange for Pack and Company to remove it) or make it otherwise acceptable to MDT, MDT may withdraw from this Agreement, in which case it shall be of no further force and effect. The City shall procure title insurance from an insurer acceptable to both

JAN 13-95 THU 15:50 HIJOKNEIS HI LAW FAX NO. 406 862 1140 P.06

parties, and the parties shall select a closing agent that is acceptable to both parties. Any and all costs of the closing agent shall be shared equally between the parties.

6. The parties shall close this transaction within 30 days of completion and approval of any required environmental report

7. The parties agree that this agreement constitutes the entire agreement between the parties. There are no additional terms or covenants, oral or otherwise, concerning this land exchange. The terms and conditions of this agreement may not be changed, altered, waived or modified in any way except as may mutually be agreed in writing.

8. This agreement is to be interpreted and construed according to the laws of the State of Montana. In the event of disagreement over any of the terms contained herein which results in litigation, the parties agree that venue shall be in the First Judicial District, Lewis and Clark County, Montana. The parties further agree that in the event of litigation, each party shall bear its own costs and attorney fees.

9. The parties recognize, agree and intend that this agreement shall be binding on the City and MDT and the respective successors in office for the life of this agreement and to that end each party hereto agree that the person(s) executing this agreement are fully and completely empowered to bind the State, MDT and the City.

10. Time is of the essence in the performance of the terms of this agreement and any modification, enlargement or reduction in any of the time frames established herein may only be done in writing. The parties agree to diligently pursue the requirements set forth herein intending to complete this transaction on or before June 30, 1999.

11. If and in the event either party is required to perform any additional acts in order to fully carry out the terms and conditions of this agreement, they will do so expeditiously and as reasonably necessary, including any resolution by the City Council or the Governor or other state entity.

12. Any notices, requests, inquiries, demands or other communication or information required, permitted or essential to this agreement shall be in writing by certified mail to the respective parties as follows:

Director
Montana Department of Transportation
P.O. Box 201001
Helena, MT 59620-1001

Mayor
City of Whitefish
Whitefish City Hall
Whitefish, MT 59937

DATED this _____ day of _____, 1999.

STATE OF MONTANA
DEPARTMENT OF TRANSPORTATION

By _____
Marvin Dye, Director

_____
Witness

CITY OF WHITEFISH

By _____
Michael Jensen, Mayor

_____
Witness

APPROVED AS TO LEGAL CONTENT

By _____

Preliminary Layout of MDT Maintenance Facility

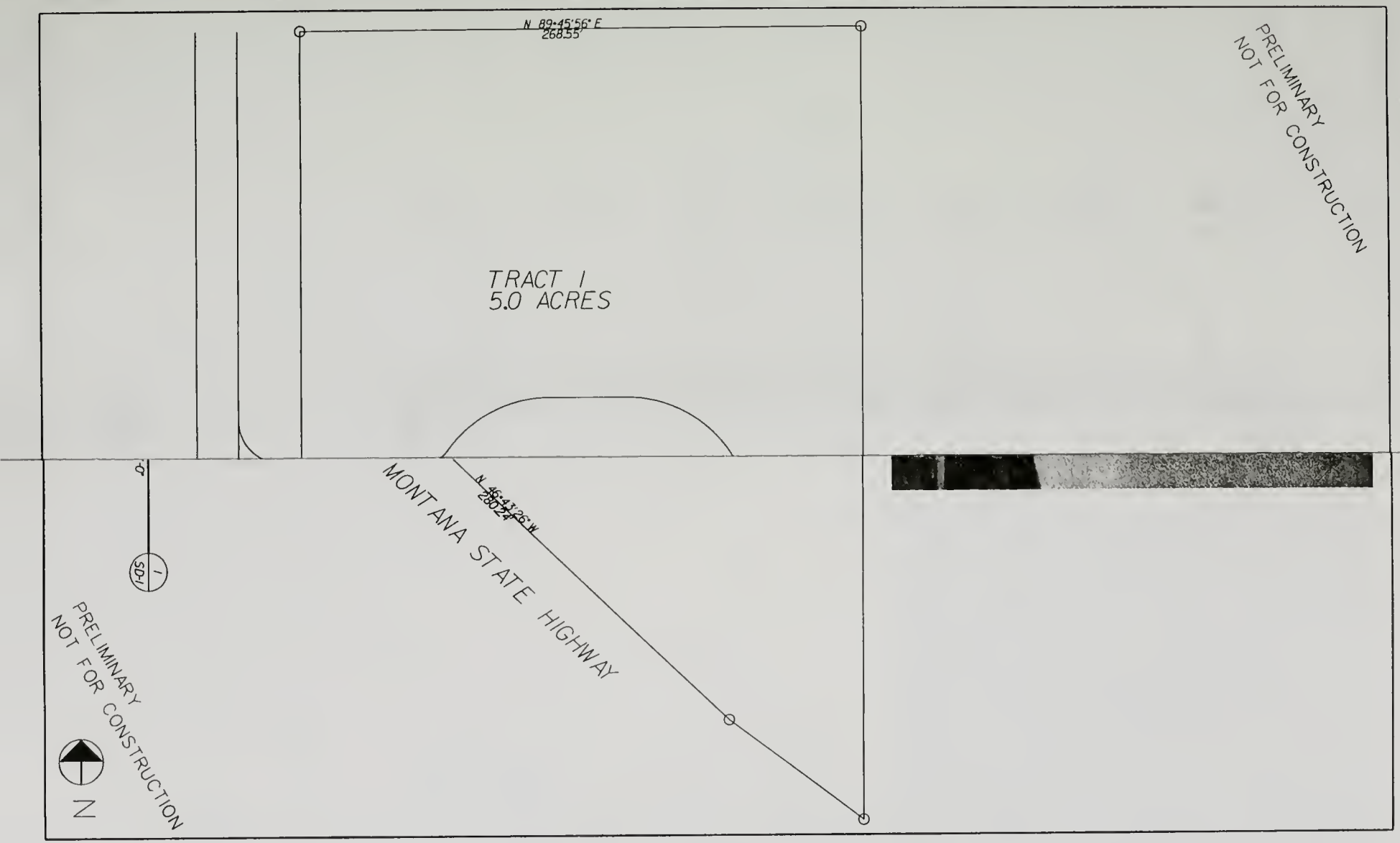

SD-1

DATE: 4/30/99

SHEET NO.

MDT WHITEFISH E.S.B.

SITE PLAN

SCALE:

DRAWN BY:

CHECKED BY:

PROJECT NO:

DTA ARCHITECTURE
DOWLING TINTINGER ARCHITECTURE, P.C.
50 SOUTH PARK AVENUE
HELENA, MT 59601
443-7224
FAX 449-2036

MEP CONSULTANT:
SMD ENGINEERING
600 LOLA STREET
HELENA, MT 59601
(406) 442-5875

STRUCTURAL ENGINEERING:
MORRISON-MAIERLE, INC
901 TECHNOLOGY BLVD PO BOX 1113
BOZEMAN, MT 59771 (406)587-0721

REVISIONS	
DATE	ITEM/SUBJECT

OWNER:

OWNERS NAME

PRELIMINARY
NOT FOR CONSTRUCTION

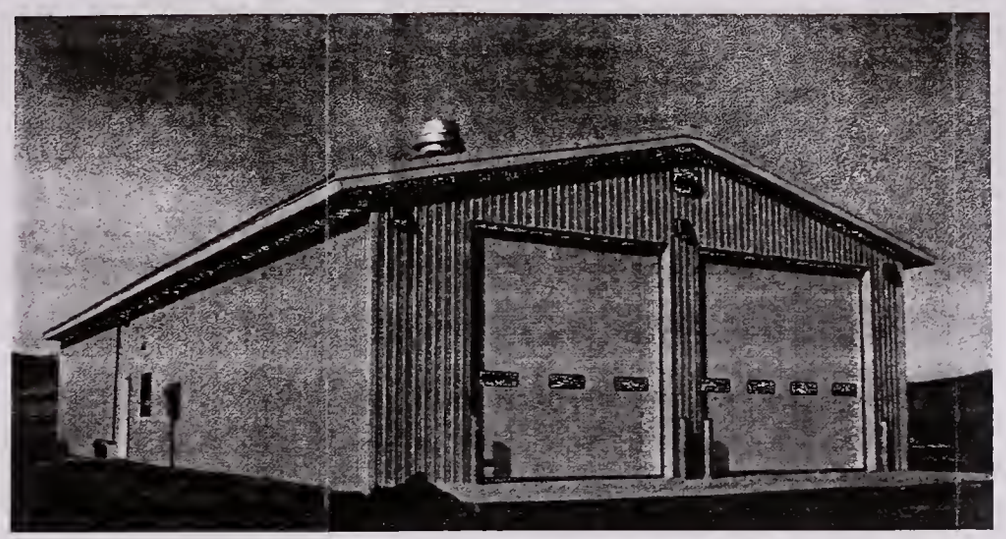

926.55'
S 00-05'34" W

N 89-45'56" E
288.55'

TRACT 1
5.0 ACRES

NEW
6-BAY
EQUIPMENT
STORAGE
BUILDING

EXISTING
OFFICE

EXISTING
SHED

EXISTING
PUMP HOUSE

N 46-41'25" W
280.24'

MONTANA STATE HIGHWAY

685.69'
N 00-05'34" E

KALNER LANE

SITE PLAN
SCALE: 1" = 30'-0"
1
SD-1

PRELIMINARY
NOT FOR CONSTRUCTION

N

REVISIONS	
DATE	ITEM/SUBJECT

OWNER:
OWNERS NAME

DTA ARCHITECTURE
DOWLING FINSTAD ARCHITECTURE P.C.
58 SOUTH PARK AVENUE
HELENA, MT 59601
443-7224
FAX 449-2836

MEP CONSULTANT:
SMD ENGINEERING
600 LOLA STREET
HELENA, MT 59601
(406) 442-5875

STRUCTURAL ENGINEERING:
MORRISON-MAIERLE, INC
901 TECHNOLOGY BLVD, PO BOX 1113
BOZEMAN, MT 59771 (406) 587-0721

SCALE:
DRAWN BY:
CHECKED BY:
PROJECT NO:

MDT WHITEFISH E.S.B.

SITE PLAN

DATE 4/30/99
SHEET NO.
SD - 1

PRELIMINARY
NOT FOR CONSTRUCTION

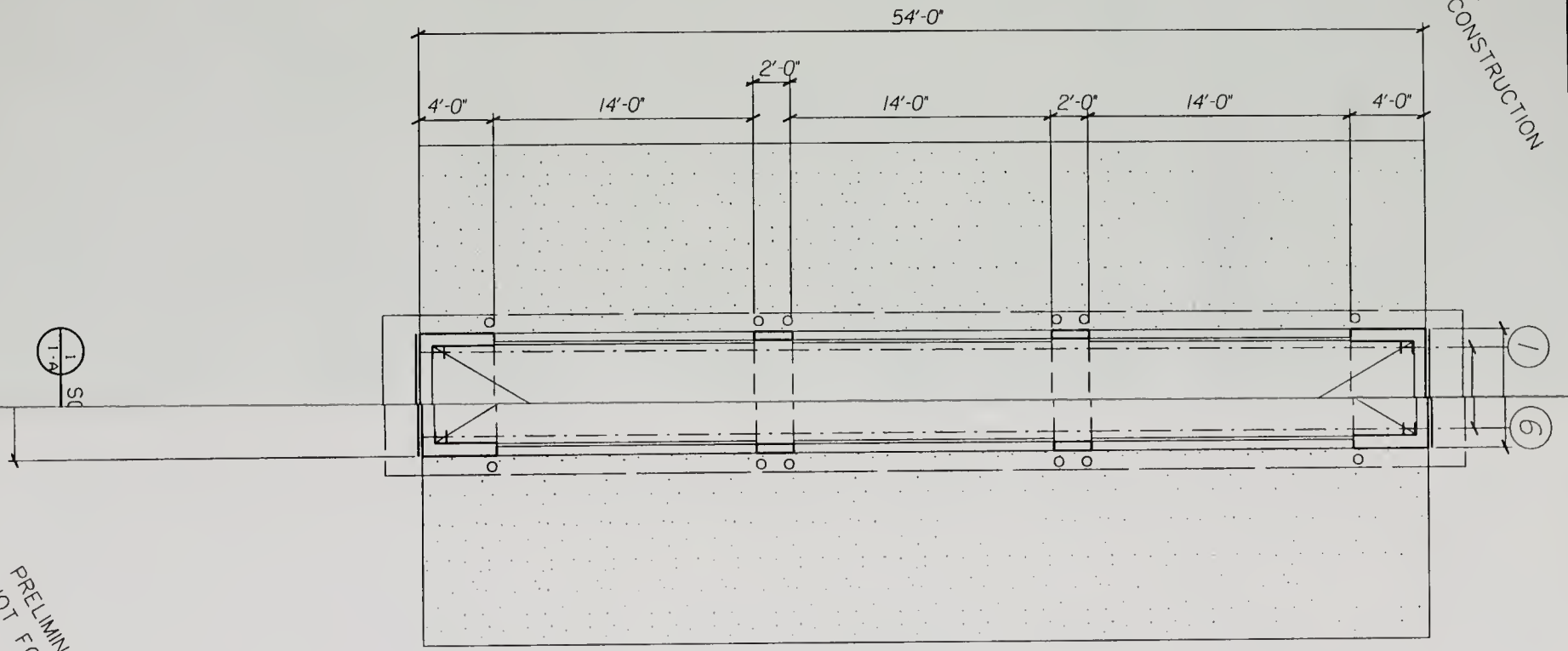

PRELIMINARY
NOT FOR CONSTRUCTION

DATE: 4/30/99	
SHEET NO.	

MDT WHITEFISH E.S.B.

SCALE:
DRAWN BY:
CHECKED BY:
PROJECT NO:

DTA ARCHITECTURE
DOWLING TINTINGER ARCHITECTURE, P.C.
50 SOUTH PARK AVENUE
HELENA, MT 59601
443-7224
FAX 449-2036

MEP CONSULTANT:
SMD ENGINEERING
600 LOLA STREET
HELENA, MT 59601
(406) 442-5875

STRUCTURAL ENGINEERING:
MORRISON-MAIERLE, INC
901 TECHNOLOGY BLVD. PO BOX 1113
BOZEMAN, MT 59771 (406)587-0721

REVISIONS	
DATE	ITEM/SUBJECT

OWNER:

OWNERS NAME

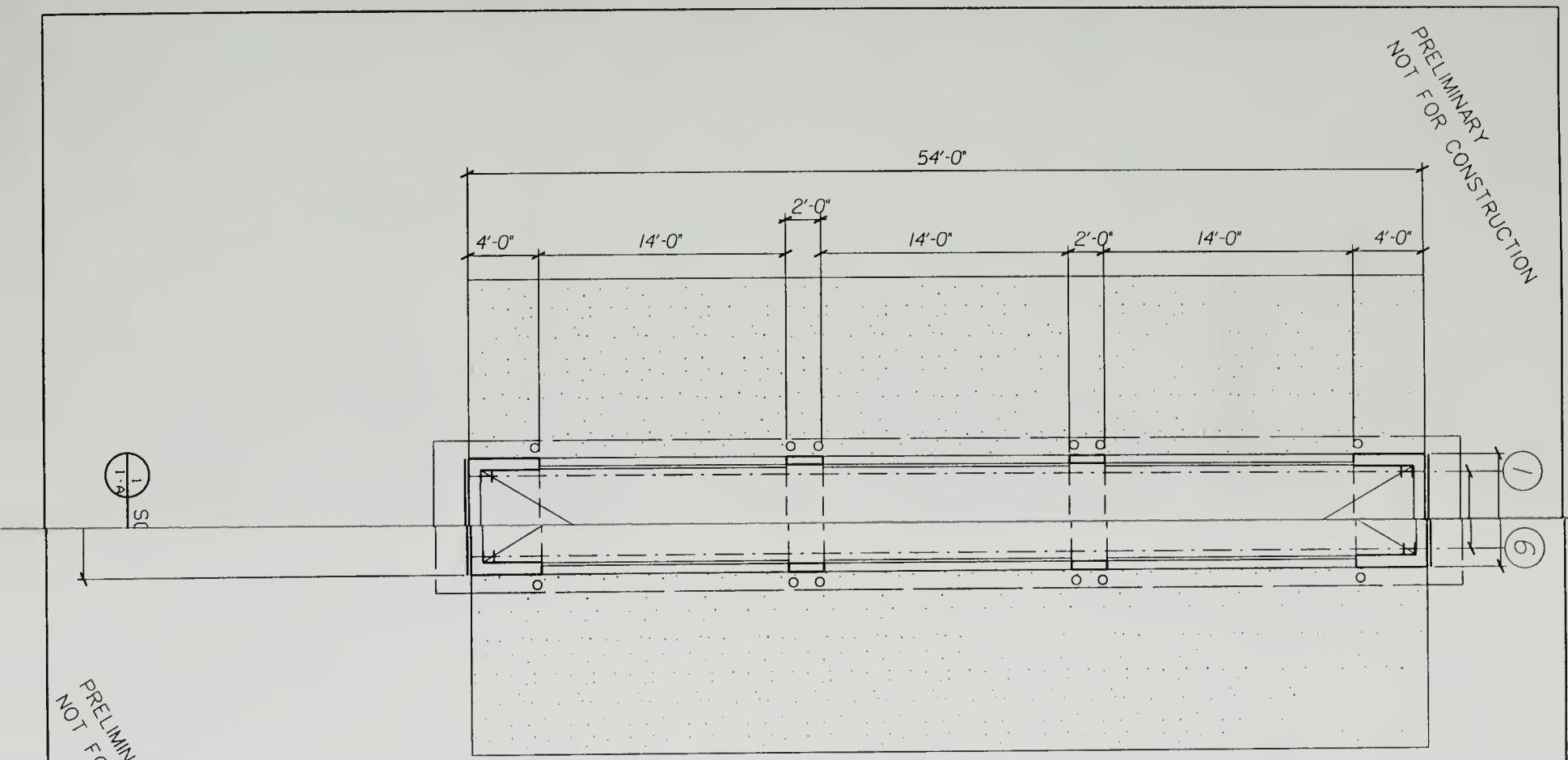

PRELIMINARY
NOT FOR CONSTRUCTION

PRELIMINARY
NOT FOR CONSTRUCTION

SHEET NO.	
DATE: 4/30/99	

MDT WHITEFISH E.S.B.

SCALE:	
DRAWN BY:	
CHECKED BY:	
PROJECT NO:	

DTA ARCHITECTURE
DOWLING TINTINGER ARCHITECTURE, P.C.
50 SOUTH PARK AVENUE
HELENA, MT 59601
443-7224
FAX 449-2036

MEP CONSULTANT:
SMD ENGINEERING
600 LOLA STREET
HELENA, MT 59601
(406) 442-5875

STRUCTURAL ENGINEERING:
MORRISON-MAIERLE, INC
901 TECHNOLOGY BLVD. PO BOX 1113
BOZEMAN, MT 59771 (406)587-0721

REVISIONS	
DATE	ITEM/SUBJECT

OWNER:

OWNERS NAME

PRELIMINARY
NOT FOR CONSTRUCTION

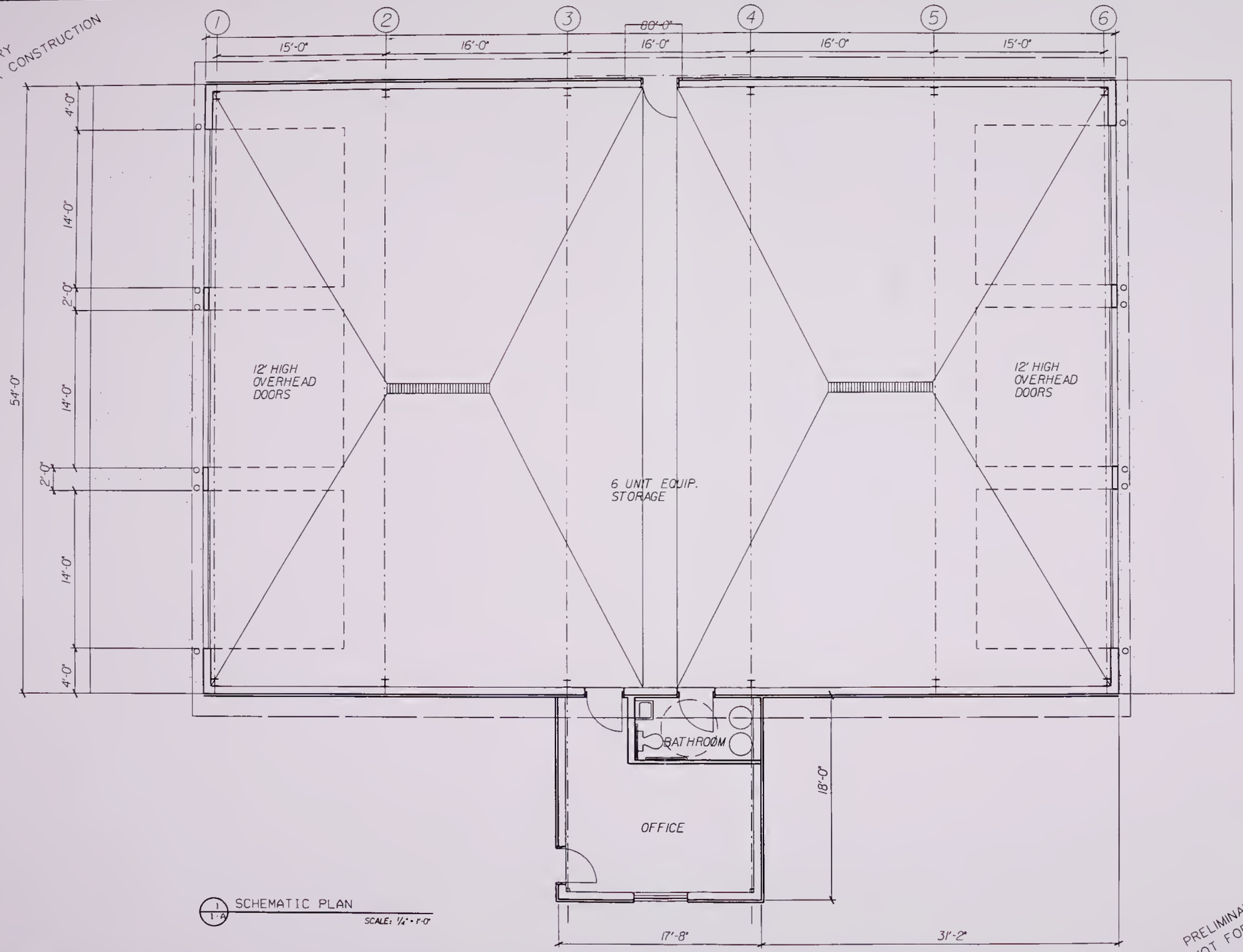

1/1.A SCHEMATIC PLAN

SCALE: 1/4" = 1'-0"

PRELIMINARY
NOT FOR CONSTRUCTION

REVISIONS
DATE | ITEM/SUBJECT

OWNER:
OWNERS NAME

DTA ARCHITECTURE
DOWLING TINTINGER ARCHITECTURE, P.C.
58 SOUTH PARK AVENUE
HELENA, MT 59601
443-7224
FAX 449-2836

MEP CONSULTANT:
SMD ENGINEERING
600 LOLA STREET
HELENA, MT 59801
(406) 442-5875

STRUCTURAL ENGINEERING:
MORRISON-MAIERLE, INC
901 TECHNOLOGY BLVD. PO BOX 1113
BOZEMAN, MT 59771 (406)587-0721

SCALE:
DRAWN BY:
CHECKED BY:
PROJECT NO:

MDT WHITEFISH E.S.B.

DATE: 4/30/99
SHEET NO.

Pertinent Correspondence

Pertinent Correspondence

FLATHEAD COUNTY
BOARD OF ADJUSTMENT

FLATHEAD COUNTY ZONING ADMINISTRATOR
FLATHEAD REGIONAL DEVELOPMENT OFFICE
723 FIFTH AVENUE EAST, ROOM 414
KALISPELL, MT 59901
TELEPHONE: (406) 758-5980
FAX: (406) 758-5781

May 7, 1999

John Phelps, City Attorney
City of Whitefish
204 Central Avenue
Whitefish, MT 59937

Steve Herzog; Chief, Field Maintenance Bureau
Montana Department of Transportation
PO Box 7308
Kalispell, MT 59904-0308

Re: Zoning Exemption for the MDOT Field Maintenance Facility

Dear John and Steve:

As you are aware, the Flathead County Board of Adjustment met at their regular meeting of May 4, 1999 and held a public hearing as required under Section 76-2-402 of the Montana Code when a use is proposed by a local government agency which it is not specifically allowed by the zoning. You are proposing a field maintenance facility on property in the Southeast Rural Whitefish Zoning District which is zoned SAG-10, a Suburban Agricultural zoning district. The proposed use is not listed as either a permitted or conditionally permitted use in this district. The property proposed for the maintenance facility is located on the northeast corner of Montana Highway 40 and Kellner Lane in Whitefish.

Narda Wilson of the Flathead Regional Development Office presented staff report FZV-99-4 to the board. She explained that the City of Whitefish is claiming an exemption from the local zoning regulations on behalf of MDOT in order to facilitate their negotiations to relocate the maintenance facility currently located on the west side of Baker Avenue in Whitefish. She noted the City would like to develop a business park on the site and that the relocation of the facility would be the required first step. She noted it will benefit the community as a whole by reducing the impacts to the urban part of town and provide an area for needed economic development in Whitefish. At the public hearing no one except John Phelps spoke regarding the proposal.

The Flathead County Board of Adjustment is forwarding this letter to confirm that the public hearing was held and that there were no comments received from the public. If you have any questions regarding this matter, please contact Narda Wilson, Senior Planner, at (406) 758-5980.

Sincerely,

Thomas R. Jentz
Flathead County Zoning Administrator

c: Pack and Company, 2355 Hwy 93 North, Kalispell, MT 59901

H:\FC\transmit\FZV99-4

State Historic Preservation Office

Montana Historical Society

1410 8th Avenue • PO Box 201202 • Helena, MT 59620-1202 • (406) 444-7715 • FAX (406) 444-6575

May 19, 1999

Daniel M. Norderud
Robert Peccia & Assoc.
PO Box 5653
Helena, MT 59604

RE: Cultural Resource File Search - Whitefish Business Park Environmental Review, FH Co.

Dear Mr. Norderud:

I have conducted a cultural resource file search for the above cited project area. There are currently no previously recorded historic or archaeological sites within the designated search locale. The absence of cultural properties does not mean that they don't exist but rather may reflect the lack of any previous cultural resource inventory. There has been one previous cultural resource inventory in the area. Gary Williams did the *Kalispell – Whitefish 1.6 Mile Extension* in April of 1988 for the Montana Department of Transportation. If you wish to obtain further information on this report you may contact me at the number listed below.

We feel that due to the lack of previous cultural resource inventory in the area that there is the possibility that unknown or unrecorded cultural properties may be impacted. We are also concerned on whether or not lands under the ownership of the City of Whitefish or the Montana Department of Transportation will be transferred to the landowner, as these lands also need to be considered for impacts. We would recommend that those areas that will be transferred to the state and the city be inventoried for cultural properties prior to ground disturbing activities. Thank you for consulting with us.

If you have any further questions or comments please feel free to contact me at (406)-444- 7767 or by e-mail at pmelton@state.mt.us.

Sincerely,

Phillip E. Melton
Cultural Records Manager

File: MDOT/1999

RECEIVED
MAY 20 1999
ROBERT PECCIA
& ASSOCIATES

Newspaper Article and Public Notice of Proposed Land Exchange EA

Town & Country

nter Carnival
ds volunteers

t year's winter carnival
t for February 3-6.
unity members are
aged to help with next
theme. Anyone who
to submit ideas may do
eeding ideas to Box 364,
fish 59937.
nteers are also needed
ommunity organizations
l as chairpersons for the
, treasure hunt, cos-
souvenir shirts, publici-
d events. Call Holly
en at 862-1355 or the
ber of Commerce at 862-
or more information.

ple needed to
lant flowers

nteers are needed by the
fication committee to
out both physically and
ially with planting flow-
round town. Donations
e mailed to: TCOB, box
Whitefish 59937. Support
eded to make Whitefish
n!

Applications

City looks at land swap for development

City eyes gravel pit land behind Safeway store

The city of Whitefish, the Montana Department of Transportation (MDT), and a private land owner have reached an agreement whereby the City would acquire an 18-acre parcel from MDT and MDT would acquire a five acre parcel from the private land owner.

The 18-acre parcel would provide the city with a suitable site for future development, while the five acre parcel would allow MDT to construct a new highway field maintenance facility.

The site to be acquired by the city is located west of Baker Aveoue, behind the Safeway store. The property is presently owned by MDT and used as a gravel pit. Following acquisition, the city intends to continue gravel pit operations while working toward a possible industrial park or other development plan.

The property to be acquired by MDT is located directly oorth of the intersection of Montana Highway 40 and Whitefish Stage Road. MDT proposes to construct a building with an office and stalls to accommodate storage of between six and eight large trucks, snowplows and other similar equipment on the parcel north of Highway 40. Sand for winter road maintenance would also be stockpiled on the property. A crew of four persons would likely work out of the MDT maintenance facility.

The city is now in the process of developing an Environmental Assessment to identify and evaluate the potential impacts of implementing this proposed land exchange. If the environmental review process shows no significant impacts are likely to occur from the proposed land exchange, then the project can proceed without further evaluation. Although no public hearing is planned, notification will be made in the local newspaper that the Environmental Assessment has been completed and is available for public review. A decision regarding the proposed land exchange should be made this summer.

For more information or to send written comments on this project, contact Dan Norderud of Robert Peccia and Associates. Box 5653, Helena 59604. Phone 447-5000 or John Phelps, city attorney, 204 Central Avenue, Whitefish 59937.

Written comments should be provided by June 7 to be considered in the Environmental Assessment.

Board gives OK for Central bond

By Kevin Crough
Staff Writer

With several issues of life safety facing them, the trustees of the Whitefish School Board Tuesday authorized school personnel to start work on a bond issue to repair the Central School building.

"The building still has life in it, how to campaign legally for a school bond issue. Malletta discussed the "ethics bill" passed by a past Legislature that includes rules and regulations regarding school bond elections.

The board took action on one item Tuesday. The trustees voted unanimously to adopt the Montana

No whining here

NOTICE OF AVAILABILITY
WHITEFISH BUSINESS PARK LAND EXCHANGE
ENVIRONMENTAL ASSESSMENT

The City of Whitefish (City) has prepared an Environmental Assessment (EA) that examines the environmental effects of a proposed land exchange between the City, the Montana Department of Transportation (MDT), and a private land owner. Under the proposed land exchange, the City would purchase a 5-acre parcel from the private landowner and then transfer ownership of the land to MDT to allow the construction of a new highway field maintenance facility on the property. The new MDT maintenance facility would be located directly north of the intersection of Montana Highway 40 and Whitefish Stage Road. The City's conveyance of private property to MDT would serve as a down payment on the purchase of at least 18.84 acres of MDT land located southwest of the community along Baker Avenue and presently used as a gravel pit. Following the acquisition of the MDT property, the City would likely continue to extract some gravel from the site but would eventually fill, grade, and level the gravel pit to allow for the development of a business/industrial park and/or other community facilities at this location.

The EA for the proposed land exchange discusses the details of the transaction, identifies potential environmental impacts, and other alternatives considered by the City and MDT. Copies of the EA are available for review at the City's Public Works Department and at the Whitefish Library. Comments on this proposed project will be accepted until 5:00 p.m. on June 24, 1999. Written comments should be submitted to Daniel M. Norderud, Robert Peccia & Associates, P.O. Box 5653, Helena, Montana, 59604.

###